Zeitschrift: IABSE congress report = Rapport du congrès AIPC = IVBH Kongressbericht

Band: 11 (1980)

Artikel: Design of the Byker Viaduct

Autor: Benaim, Robert

DOI: https://doi.org/10.5169/seals-11346

Nutzungsbedingungen

Die ETH-Bibliothek ist die Anbieterin der digitalisierten Zeitschriften auf E-Periodica. Sie besitzt keine Urheberrechte an den Zeitschriften und ist nicht verantwortlich für deren Inhalte. Die Rechte liegen in der Regel bei den Herausgebern beziehungsweise den externen Rechteinhabern. Das Veröffentlichen von Bildern in Print- und Online-Publikationen sowie auf Social Media-Kanälen oder Webseiten ist nur mit vorheriger Genehmigung der Rechteinhaber erlaubt. Mehr erfahren

Conditions d'utilisation

L'ETH Library est le fournisseur des revues numérisées. Elle ne détient aucun droit d'auteur sur les revues et n'est pas responsable de leur contenu. En règle générale, les droits sont détenus par les éditeurs ou les détenteurs de droits externes. La reproduction d'images dans des publications imprimées ou en ligne ainsi que sur des canaux de médias sociaux ou des sites web n'est autorisée qu'avec l'accord préalable des détenteurs des droits. En savoir plus

Terms of use

The ETH Library is the provider of the digitised journals. It does not own any copyrights to the journals and is not responsible for their content. The rights usually lie with the publishers or the external rights holders. Publishing images in print and online publications, as well as on social media channels or websites, is only permitted with the prior consent of the rights holders. Find out more

Download PDF: 18.01.2026

ETH-Bibliothek Zürich, E-Periodica, https://www.e-periodica.ch

VIII

Design of the Byker Viaduct

Conception du Byker Viaduct

Entwurf des Byker Viaduct

ROBERT BENAIM
Project Director
Ove Arup and Partners
London, England

SUMMARY
This paper describes the design and the salient points of the construction of the Byker Viaduct. The structure is 815 m long with maximum spans of 69 m, and carries two Metro tracks. The design of the viaduct and its method of construction were strongly influenced by the terrain, and by the importance of the bridge's appearance in an urban environment. This is the first major bridge in the U.K. to be built by the match cast method of prefabrication.

RESUME
Cet article décrit la conception et les éléments importants de la construction du Byker Viaduct. L'ouvrage a une longueur totale de 815 m, avec des portées maximales de 69 m. Il porte deux voies de métro. La conception du viaduc et la méthode de construction étaient fortement influencées par le terrain, et par l'importance de l'esthétique dans un environnement urbain. Il s'agit du premier pont important du Royaume Uni construit par la méthode de préfabrication avec des joints conjugués.

ZUSAMMENFASSUNG
Dieser Artikel beschreibt den Entwurf und die wichtigsten Aspekte der Ausführung des Byker Viadukts. Diese Brücke ist 815 m lang und weist maximale Spannweiten von 69 m auf. Sie ist mit zwei Geleisen der neuen U-Bahn von Newcastle versehen. Sowohl der Entwurf als auch die Konstruktionsweise wurden vom Terrain und vom Aussehen der Brücke in ihrer Umgebung stark beeinflusst. Dieses ist die erste Brücke in Grossbritannien, die im Klebeverfahren gebaut worden ist.

1. INTRODUCTION

The Byker Viaduct is an 815m long prestressed concrete structure carrying the two tracks of the Tyne and Wear Metro, which is a new rapid transit system being built in Newcastle upon Tyne. The viaduct was designed to be built by the match cast method of prefabrication and is the first major structure of this type in the United Kingdom. The structure crosses parkland and a densely populated part of Newcastle upon Tyne. Consequently its appearance was an important factor in its design. It was completed in 1979 by Contractor John Mowlem.

2. DESIGN STUDIES

The site is clearly divided into two halves, almost equal in length (Fig. 1). In the west the metro crosses the steep sided valley of the Ouse Burn river. Two fine nineteenth century bridges, one rail and one road also cross this valley, either side of the viaduct. The valley is some 30m deep and is destined to be used as parkland (Fig. 2). In the east, the line of the viaduct crosses the urban Byker "plateau" in a corridor of land between a major new housing development and the principal shopping street of the area. In this plateau area, the viaduct passes over three major roads and a deep railway cutting and is about 6m above ground level.

The geology of the area is similarly sharply divided. The valley sides slope at about 1 in 3, and are covered with up to 10m of recent fill. Geological faults lie beneath the Ouse Burn and create a wide band of disturbed ground. Several coal seams lie beneath the site, including the 2m thick High Main seam which borings showed had been extensively worked.

No such problems exist beneath the plateau where a layer of stiff boulder clay some 4m below ground level provides a suitable foundation layer.

Relatively short spans were economical over the plateau, while the cost of foundations and piers made longer spans necessary in the valley. Whereas falsework could be used on the plateau, it was not suitable for use in the valley. Detailed comparisons of bridge types were made with spans ranging from 20m to 95m, in steel and concrete.

The principal design problem was to find a type of structure which would suit the two radically different halves of the site. Economy and aesthetics were closely linked in these design studies. For economy it was necessary to find a type of bridge and form of construction which could use the same plant throughout its length. Success in this aim would help confer continuity of appearance to the two halves of the viaduct. Mr. H. Wood of Renton Howard Wood Levin Partnership gave architectural advice to the design team.

3. DESCRIPTION OF THE VIADUCT

3.1 Viaduct Deck

The deck is 815m long 8.9m wide and consists of a single cell box with side cantilevers (Fig. 5). In plan the viaduct is S-shaped with 390m radius curves and transitions. The maximum length between expansion joints was governed by the acceptable movements at the rail joints. For this reason the viaduct is divided into three sections, with joints at each end, and between each section.

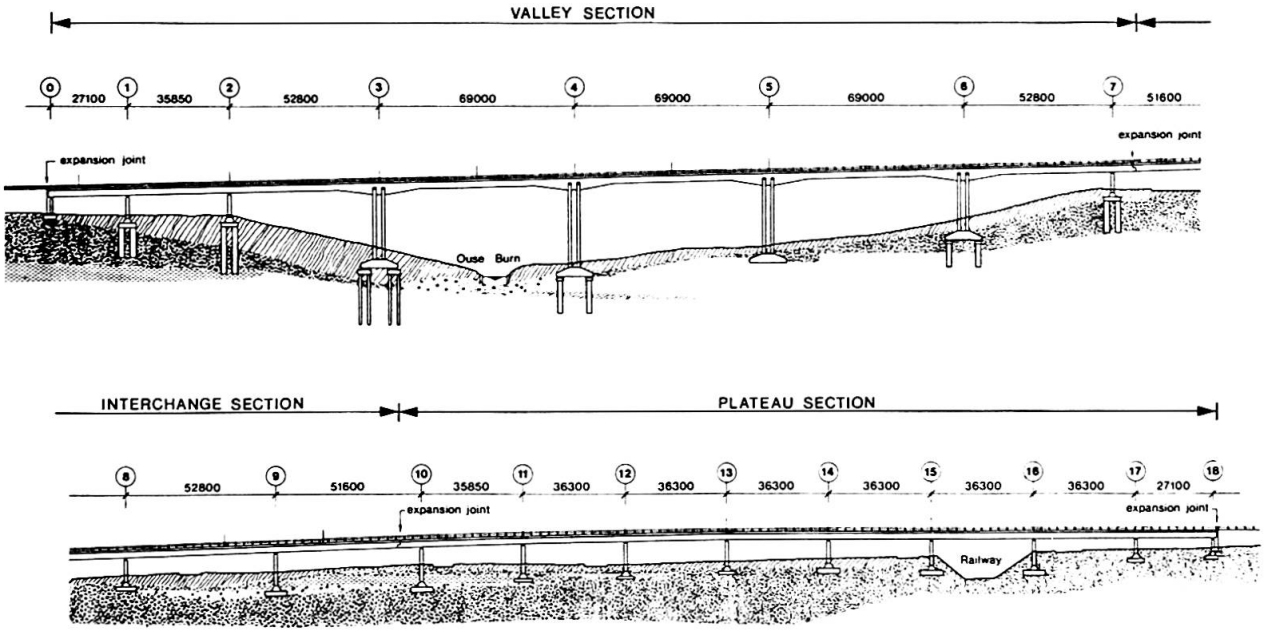
VALLEY SECTION
0 27100 1 35850 2 52800 3 69000 4 69000 5 69000 6 52800 7 51600
expansion joint
expansion joint
Ouse Burn
INTERCHANGE SECTION
PLATEAU SECTION
8 52800 9 51600 10 35850 11 36300 12 36300 13 36300 14 36300 15 36300 16 36300 17 27100 18
expansion joint
expansion joint
Railway

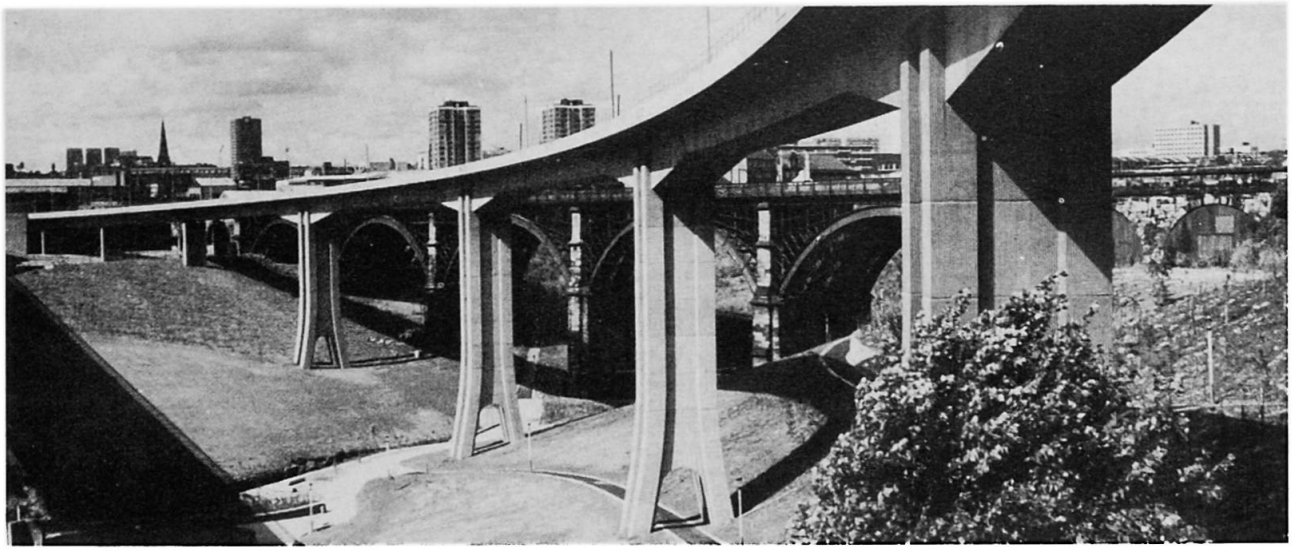

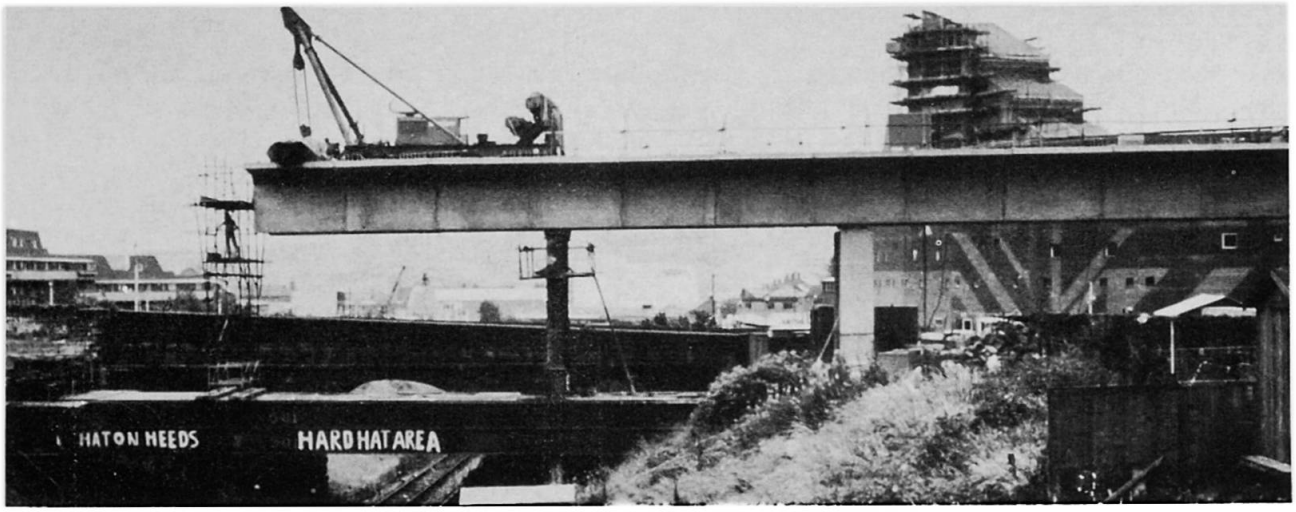
HATON HEEDS
HARD HAT AREA

The arrangement of spans shown in Fig. 1 gives a good relationship between the piers of the viaduct and the adjacent railway bridge in the valley, as well as optimum pier positions with respect to roads and the railway cutting on the plateau. The positions of the two interchange section piers were fixed by a future road alignment.

The minimum practical depth for the 52m spans is 2.25m. This is also the greatest depth that is visually acceptable for the low urban section, and provides a very economical deck for the short plateau spans. 2.25m is also sufficient for the 69m valley spans on condition that a high degree of fixity is provided by deepening the deck to 4m over each support, and by providing double piers.

3.2 Piers and Foundations

The typical plateau pier is I-shaped, with 1.1m thick ends and a 400mm thick web. The double valley piers use the same basic shape with the end thickenings extended to provide the extra load capacity (Fig. 4). The two leaves are spaced at 2.9m centres. The end thickenings flare outwards near the base of the columns to increase the stability of the foundation and to allow the web to be cut away. The opening allows precast deck segments to pass through during construction, saves material and makes the piers more agreeable to walk around and beneath. The double piers are stiff for moments but flexible in shear, and provide a stable base for free cantilever erection, obviating temporary supports.

The valley section is built into its four double piers which flex under the length changes of the deck. Mechanical sliding bearings are provided on each single pier and on the abutments. The interchange section is pinned to its two piers and rests on the adjacent sections through halved joints equipped with sliding bearings. The plateau section is pinned to piers 13 and 14.

The valley piers are founded on H-shaped pile caps resting on the rock, or on a single 1.83m diameter, 1200t capacity rock socket pile in each corner. The plateau columns are founded on the boulder clay, either on pads, or on four 2.1m diameter piles which stop in deeper clay layers. In the event of unforeseen foundation settlement, provision is made to realign the deck at each pier.

4. CONSTRUCTION METHOD AND DECK DETAILS

4.1 General

The deck was to be constructed by the countercast method of prefabrication using the palette technique. Although at 7300m^2 the deck is small for such a method, it was considered viable if a launching girder could be dispensed with. Over the plateau lorry access to the construction head was everywhere possible and erection could be carried out with a simple fixed winch on the deck. However the valley slopes were too steep for such access. For this reason, the holes in the double piers were made just big enough to allow the precast segments to pass through (Fig. 6). A railway line was laid down the axis of the viaduct and the segments rolled down till they were beneath the construction head, and lifted using the same fixed winches. Two lengths of segment were specified, 2.6m for thick or deep segments and 3.3m for the rest. The heaviest segment weighed 46t.

4.2 Valley Section

Four metres of deck above the double piers were cast insitu. The first precast segment on either side of the pier was temporarily propped, leaving a 100mm gap which was filled with concrete (Fig. 4). The alignment of these sections was

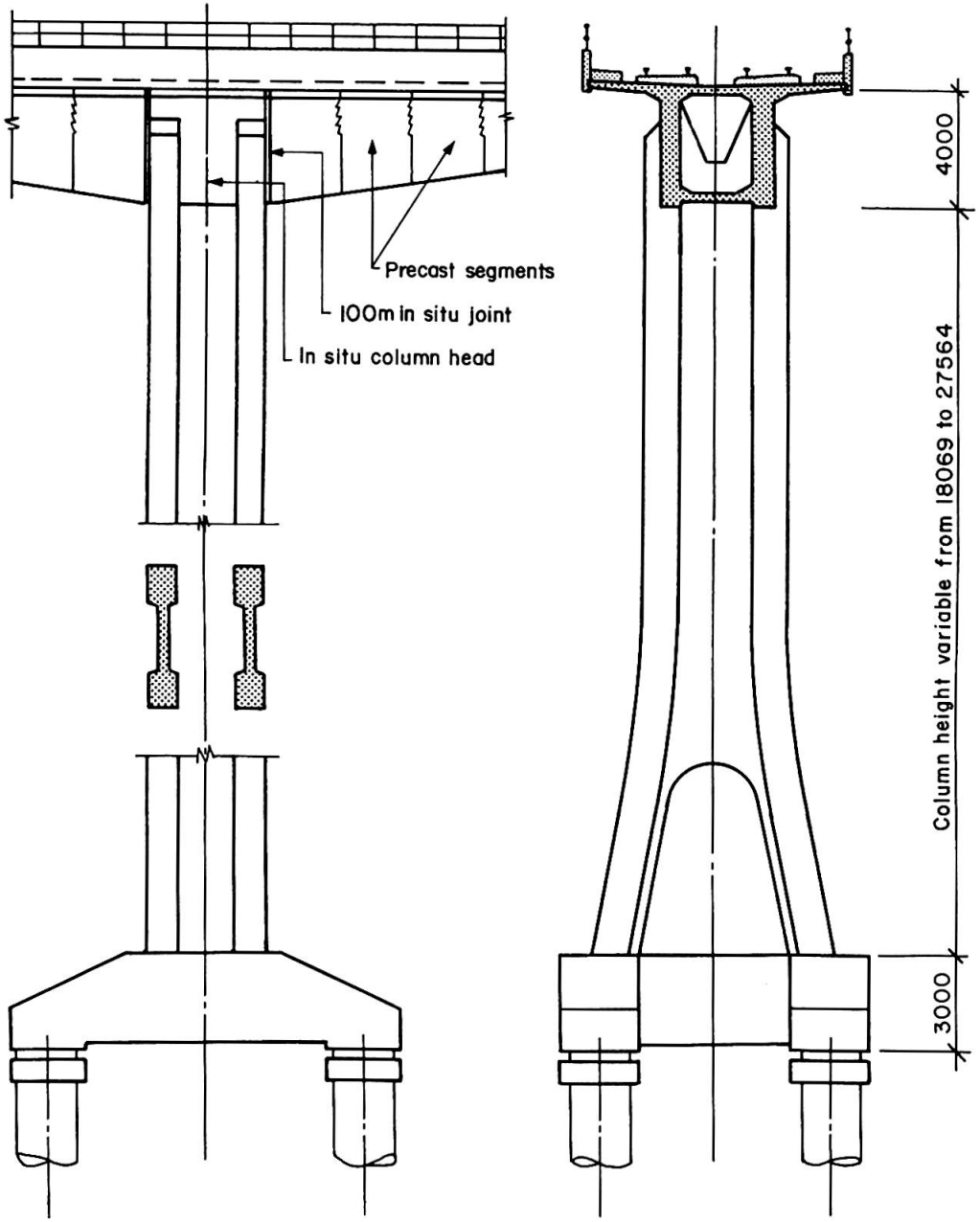

VALLEY SECTION

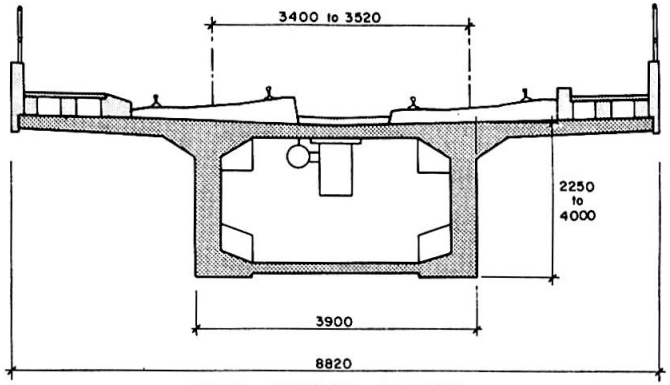

TYPICAL CROSS SECTION OF DECK

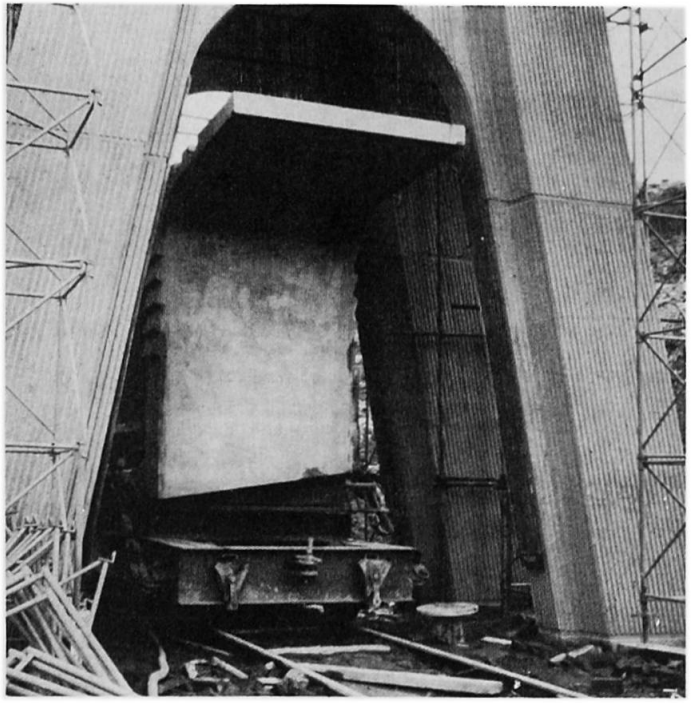

critical, as their orientation would determine that of the complete match cast cantilever. Two types of prestress are used. MacAlloy bars were stressed while the epoxy jointing glue was still fluid and 12K13 Freyssinet tendons, subsequently threaded, provide the main prestress. A total of twelve 32mm MacAlloy bars are housed in the top flange of the box, and six 16mm bars in the bottom. Once stressed, these bars were grouted and were part of the design permanent prestress. Due to the slenderness of the deck a very high prestress force was required, with an average compression of up to $10N/mm^2$ in the long spans.

Large multiple unreinforced shear keys are provided in each web. For the 2.2m deep segments there are three keys per web, with up to five on the deeper sections. The shear keys also act as the anchorage planes for the construction prestressing cables.

4.3 The Plateau Section

As the plateau section has eight short spans it was not considered sensible to build each span in cantilever. Consequently a novel construction technique was used which consisted in starting construction at a central pier (pier 14) and building out continuously in each direction passing over the intermediate piers using three temporary props per span. Thus a continuous match cast deck 287m long would be built (Fig. 3). As the cable prestressing was all anchored in internal blisters, it was possible to erect a complete span on temporary supports, using only the bar prestressing, and to thread and stress the cables later.

5. DECK FINISHES AND TRACKWORK

The rail track beds were 2.2m wide reinforced concrete slabs laid by the British Rail/MacGregor slipform paver to a specified tolerance of 3mm in 3m. The continuously welded rail was laid on discreet rubberised pads on the concrete, and held in place by Pandrol clips. The deck surface was waterproofed after laying the track slabs with a sprayed on compound. The deck is trimmed by precast parapets and a light steel handrail.

The traction current is 1500 volt DC supplied by an overhead cable with the return in the rails. It was feared that any breakdown in rail insulation could give rise to parasitic currents flowing in the prestressing cables which may cause corrosion. To avoid this risk, all prestressing anchors are electrically connected and are connected to the rails through a diode which ensures a safe polarity.

6. EPOXY GLUE

In view of the importance of the glue in the structural safety of the deck and of the difficulty of adequately specifying all aspects of its performance, the Consultants specified that Ciba Geigy glue and hardener be used. Test samples were taken of the glue from every joint of the viaduct. Test cylinders were cored at any suspect joint, such as those made during very cold or wet weather and tested for adhesion of the glue. There were no failures.