Zeitschrift: IABSE congress report = Rapport du congrès AIPC = IVBH Kongressbericht

Band: 11 (1980)

Artikel: Computerized elasto-plastic analysis of steel reticulated plates

Autor: Mezzina, Mauro / Prete, Giuseppe / Tosto, Antonio

DOI: https://doi.org/10.5169/seals-11335

Nutzungsbedingungen

Die ETH-Bibliothek ist die Anbieterin der digitalisierten Zeitschriften auf E-Periodica. Sie besitzt keine Urheberrechte an den Zeitschriften und ist nicht verantwortlich für deren Inhalte. Die Rechte liegen in der Regel bei den Herausgebern beziehungsweise den externen Rechteinhabern. Das Veröffentlichen von Bildern in Print- und Online-Publikationen sowie auf Social Media-Kanälen oder Webseiten ist nur mit vorheriger Genehmigung der Rechteinhaber erlaubt. Mehr erfahren

Conditions d'utilisation

L'ETH Library est le fournisseur des revues numérisées. Elle ne détient aucun droit d'auteur sur les revues et n'est pas responsable de leur contenu. En règle générale, les droits sont détenus par les éditeurs ou les détenteurs de droits externes. La reproduction d'images dans des publications imprimées ou en ligne ainsi que sur des canaux de médias sociaux ou des sites web n'est autorisée qu'avec l'accord préalable des détenteurs des droits. En savoir plus

Terms of use

The ETH Library is the provider of the digitised journals. It does not own any copyrights to the journals and is not responsible for their content. The rights usually lie with the publishers or the external rights holders. Publishing images in print and online publications, as well as on social media channels or websites, is only permitted with the prior consent of the rights holders. Find out more

Download PDF: 21.02.2026

ETH-Bibliothek Zürich, E-Periodica, https://www.e-periodica.ch

UNIVERSITA' DEGLI STUDI DI BARI
FACOLTA' DI INGEGNERIA
Istituto di Scienza delle Costruzioni
Viale Japigia, n. 182
70126 BARI (ITALY)

Computerized elasto-plastic analysis of steel reticulated plates.

Mauro MEZZINA - Giuseppe PRETE - Antonio TOSTO

PROBLEM FORMULATION

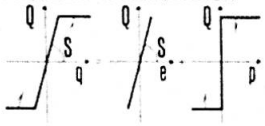

$s = \max \omega$

$\varphi = A\lambda + B\omega + k$

$\varphi^T \lambda = 0 \; : \varphi, \lambda, \omega \geq 0$

PLCP: Parametric Linear Complementarity Problem solvable by Linear Programming algorithm (Restricted Basis entry rule).

STEP-WISE SOFTENING

Incremental formulation from POST-CRITICAL UNLOADING (d = buckled bars):

$\varphi_c = \varphi_c' + d = 0 \; ; \varphi_c', d \geq 0$

$s = \max \Delta\omega$

$$\begin{vmatrix} \varphi_a \\ \varphi_c' \end{vmatrix} = A\,\Delta\lambda + B\,\Delta\omega + \begin{vmatrix} \dot{\varphi}_a \\ -d \end{vmatrix}$$

$$\begin{vmatrix} \varphi_a \\ \varphi_c' \end{vmatrix} \geq 0 : \begin{matrix} \Delta\lambda \geq 0 \\ \Delta\omega \text{ unr.} \end{matrix} ; \begin{vmatrix} \varphi_a \\ \varphi_c' \end{vmatrix}^T \Delta\lambda = 0$$

BASIS	ω	φ	$\lambda(\Delta\lambda)$	R.H.S.
φ_a λ_b $\lambda_c(\Delta\lambda_c)$ ω	T_1'	T_2'	T_3'	φ_a λ_b $\lambda_c(0)$ ω'
z		c'		z'

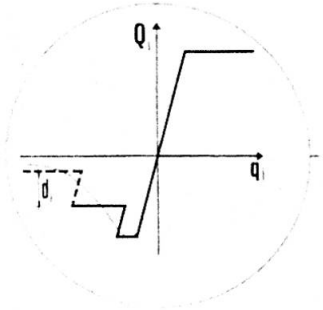

BASIS	ω	$\varphi(\varphi')$	$\lambda(\Delta\lambda)$	R.H.S.
φ_a λ_b $\varphi_c(\varphi_c')$ ω	T_1'	T_2'	T_3'	φ_a λ_b $0(-d)$ ω
z		c'		z'

FORMULATION OF TRUSS ELASTO-PLASTIC PROBLEM WITH STEP-WISE SOFTENING

$\underline{\lambda}_c = \left\{ \begin{matrix} \lambda_i \text{ basic variables} \\ \text{corresponding to the stress levels} \\ Q_i \text{ to degrade} \end{matrix} \right\}$

is $\underline{\lambda}_c$ empty ?

$\underline{d} = \left\{ \begin{matrix} d_i \text{ degrade values such that} \\ (Q_i - d_i) \text{ is an "ADMISSIBLE LOAD"} \\ \text{level in the buckled bar "i"} \end{matrix} \right\}$

store the $\underline{\lambda}_c$ values
set $\Delta\underline{\lambda}_c = \underline{0}$

replace in the basis the $\Delta\underline{\lambda}_c$ variables with the corresponding $\underline{\varphi}_d$

set $\Delta\varphi_c = -d$
(UNFEASIBLE !)

"Phase 1" R.B. procedure at constant load level

does a feasible basic solution exist ?

ω incrementable with R.B. pivoting ?

unbounded domain ?

R.B. PIVOTING

$\omega \to \infty$ evaluate incremental response

STOP

STOP

READ COLLAPSE MECHANISM

EXAMPLE nr.1

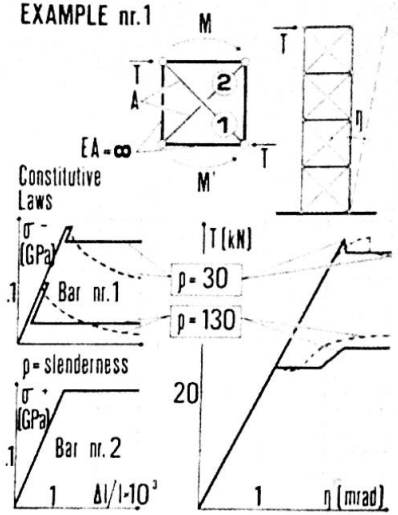

EXAMPLE nr.2

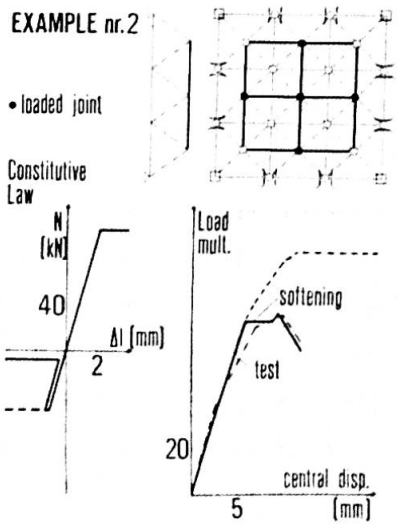

COMPUTERIZED ELASTO-PLASTIC ANALYSIS OF STEEL RETICULATED PLATES

Mauro MEZZINA - Giuseppe PRETE - Antonio TOSTO
Istituto di Scienza delle Costruzioni, Facoltà di Ingegneria
Università di Bari
Bari, Italy

In the structural collapse analysis special emphasis must be given to the knowledge of all the parameters that characterize the reached limit state. In fact this is the only instrument for evaluating the agreement in truth of such a limit state, that the specific mathematical model allows to simulate. In the special case of trusslike structures such a problem is of primary importance, due to the presence of "physically unstable" elements in the collapse mechanism. This event can invalidate the quality of the results obtainable with the "classical" limit analysis methods. In this context we propose an approach to the problem that, still remaining in the Mathematical Programming method field, arrange the solution of the evolutive elasto-plastic analysis of this kind of structures as a particular Linear Programming Problem.

The formulation starts, as indicated in |1|, from the equilibrium,compatibility and stress-strain relationships for the whole structure in elastic-perfectly plastic behaviour: after some algebra it is possible to see that the collapse load factor is obtainable by the solution of the L.P. Problem shown in the Poster, where:

$\underline{q}$ = bar elongations	$\underline{Q}$ = bar forces
s = collapse load factor	ω = load multiplier
$\underline{\phi}$ = yield functions	$\underline{\lambda}$ = plastic multipliers
$\underline{k}$ = yield limits	$\underline{N}$ = diag $\{1\ -1\}$ = activable yield modes
$\underline{A} = -\ \underline{N}^T\ \underline{Z}\ \underline{N}$	$\underline{B} = -\ \underline{N}^T\ \underline{Q}^e$
$\underline{Q}^e$= elastic stress response to loads $\underline{F}$	$\underline{Z}$ = influence matrix of self-stresses due to imposed strains

Such a formulation must be completed taking into account the post-critical behaviour, simulated in the Q_i - q_i law with a series of constant-load steps,decreasing more and more up to the asymptotic level. The logical operations that must be performed from a "degrading" point are shown in detail in the depicted "flowchart".

The first results of the numeric-experimental comparison, presently in effect, are very comfortable. From these applications we report here the most significant ones, according to us. In particular the Example n. 2 concerns the numerical simulation of a collapse test, performed on a prototype of reticulated grid.As it is possible to see, the calculated values are very close to the experimental ones both from a static and deformative point of view.

REFERENCES.

1. M. MEZZINA and A. TOSTO: Analisi elastoplastica di strutture reticolari in acciaio. Proc. of VII Congresso C.T.A., Torino, Italy, Oct. 1979.