Zeitschrift: IABSE congress report = Rapport du congrès AIPC = IVBH Kongressbericht

Band: 10 (1976)

Rubrik: Theme VI: Precast structures

Nutzungsbedingungen

Die ETH-Bibliothek ist die Anbieterin der digitalisierten Zeitschriften auf E-Periodica. Sie besitzt keine Urheberrechte an den Zeitschriften und ist nicht verantwortlich für deren Inhalte. Die Rechte liegen in der Regel bei den Herausgebern beziehungsweise den externen Rechteinhabern. Das Veröffentlichen von Bildern in Print- und Online-Publikationen sowie auf Social Media-Kanälen oder Webseiten ist nur mit vorheriger Genehmigung der Rechteinhaber erlaubt. Mehr erfahren

Conditions d'utilisation

L'ETH Library est le fournisseur des revues numérisées. Elle ne détient aucun droit d'auteur sur les revues et n'est pas responsable de leur contenu. En règle générale, les droits sont détenus par les éditeurs ou les détenteurs de droits externes. La reproduction d'images dans des publications imprimées ou en ligne ainsi que sur des canaux de médias sociaux ou des sites web n'est autorisée qu'avec l'accord préalable des détenteurs des droits. En savoir plus

Terms of use

The ETH Library is the provider of the digitised journals. It does not own any copyrights to the journals and is not responsible for their content. The rights usually lie with the publishers or the external rights holders. Publishing images in print and online publications, as well as on social media channels or websites, is only permitted with the prior consent of the rights holders. Find out more

Download PDF: 02.10.2025

ETH-Bibliothek Zürich, E-Periodica, https://www.e-periodica.ch

VI

Constructions en béton préfabriqué

Vorfabrizierte Bauwerke

Precast Structures

VI a

Sécurité et stabilité des éléments et des constructions

Sicherheit und Stabilität von Elementen und Bauwerken

Safety and Stability of Elements and Structures

Leere Seite
Blank page
Page vide

Structural Stability of Precast Buildings

Stabilité structurale des bâtiments préfabriqués

Stabilität vorgefertigter Hochbauten

JOSEPH VARSANO
M. Sc. Eng.
Construction Engineer
Tel-Aviv, Israel

INTRODUCTION

The great development in the industrialization of building and the vast proportion of constructions made of parts prepared in advance require both research and standardization for the various types of prefabricated building, and suitable constructive directives.

GENERAL STABILITY

The general stability of a system consisting of precast panels is determined in a decisive way by the vertical joints between the prefabricated elements and the horizontal belts between the components prepared in advance.

The function of the horizontal and vertical joints from the construction point of view is to secure:

a) the stability of the structure to horizontal forces, winds and earthquakes;

b) the stability of the construction as a means for the creation of an alternative system for the passage of forces in case of defect or failure in one of the elements or in the connections, in order to prevent a general destruction as a result from a "progressive-collapse";

c) the stability of the construction for the passage of the vertical loads.

HORIZONTAL FORCES

In spite of their great rigidity, the precast constructions are sensitive to horizontal forces, winds and earthquakes, as a result from the sensitivity of the connections between elements prepared in advance.

In comparison with conventional constructions which are relatively elastic and light, the horizontal forces operated on a precast panel construction in an earthquake are relatively great, as they are proportional to the rigidity of the structure and its weight.

Seismology enables today a precise registration of vibrations, and accelograms registered during an earthquake serve as data for the dynamic calculation of structure in earthquakes.

Most of the standards include a standard spectral line for the evaluation of the dynamic forces of a planned construction in an expected earthquake:

$$F_z = \alpha \cdot \beta \cdot \gamma_z \cdot \delta \cdot \theta \cdot \eta \cdot W_z \qquad (1)$$

F_z = equivalent horizontal force equals to earthquake.

As the dynamic coefficient β is function of the dynamic properties of the structure, it is important to determine the fundamental period of vibration "T". In the simplest way of a console with one mass "m":

$$T = 2\pi\sqrt{\frac{m}{K}} \qquad (2)$$

In a structure with a number of masses, the fundamental period of vibration T may be determined with the help of a computer, in a precise analytical way, or in an approximate way according to:

$$T = 2\cdot\pi\sqrt{\frac{\Sigma W_i A_i^2}{g \Sigma W_i A_i}} \qquad (3)$$

(See Figure No. 1).

In various standards, there are empirical formulas for determining the fundamental period; in the French "Règles Parasismiques 1969" [3] , there is, for example, a formula for the evaluation of a period suiting a structure with concrete walls, which, by its definition, is very close to the precast panel building:

$$T = 0.06 \frac{H}{\sqrt{L}} \sqrt{\frac{H}{2L + H}} \qquad (4)$$

(See Figure No. 3).

On the other hand, in the American "Recommendation for Lateral Force" S.E.A.O.C. [2] , after the changing of the formula into metric units, and in the French standard P.S.69 [3] for reinforced concrete skeleton, the period T is evaluated according to:

$$T = 0.09 \frac{H}{\sqrt{L}} \qquad (5)$$

(See Figure No. 3).

A comparison was prepared between period formulas (4) and (5) and is obtained in Figure (3) for constructions of a different width L_x, beside uniform load calculation Figure (2).

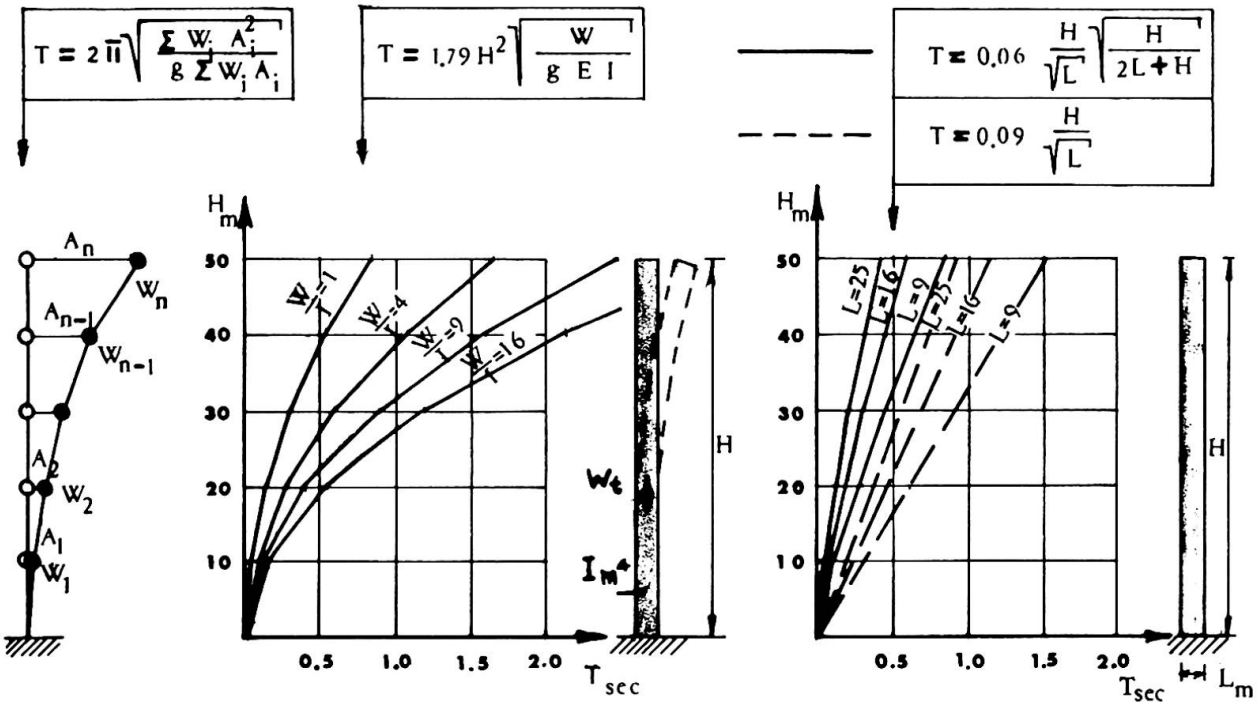

Figure (1)

Figure (2)
Uniform load calculation

Figure (3)
Comparison between code formulas

Figure (3) shows that the evaluation according to formula (4) gives a lower period than formula (5), the lateral forces therefore being greater in precast panel constructions than in reinforced skeleton.

Partial results of computer calculation for a number of prefabricated buildings, show a higher period than formula (4).

UNEXPECTED FORCES

In the last years, we have witnessed a number of failures in precast buildings, resulting from forces unforeseen in advance, such as an explosion of gas container, of hot water boiler, etc...

In picture No. 4, are seen the results of a hot water boiler explosion, on the 4th floor of an 8 storey building in Jerusalem in July 1975. The building consists of precast facades and ceilings,and gables cast in situ.

The comparison of the results of the relatively great damage caused by the known explosion of a gas container on the 18th floor of a 22 storey precast building at Ronan Point, London, in May 1968, and the relatively small damage in the explosion on the ground floor of a precast building in Algiers,



Figure (4)
Results of boiler explosion in Jerusalem

stresses the importance of the horizontal and vertical belts cast between the precast parts, for the stability of the construction in the case of such failures. "Ronan Point building was not properly braced as was the one in Algiers or as the CEB/CIB Recommendations require". (Reference [4]).

In order to prevent a progressive collapse in the case of failure in one of the construction components, there should be an alternative way for the passage of forces, as the precast parts are usually simply supported and the reserves in absence of fixing are small. There is a possibility of using a three dimensional system of belts cast around the precast parts, in order to ensure continuity, which may serve as substitute for the passage of forces, thus preventing a progressive collapse.

The efficiency of such a belt system depends to a great extent on the properties of the joints:

a) Ability of the vertical joint between precast panels to transfer tangential forces on all the height of the wall, in a "joint organisé" with keys, etc., in order to secure a participation of nearby walls and to transfer them into one stiffening shear wall.

b) use of the intersection between the horizontal and vertical belts to transfer the shearing forces as a bolt ("verrou") action.

c) possibility of the joints to transfer tensile forces by the reinforcement in the belts, by locking bars or by steel welding.

d) keeping infinite stiffness of the ceilings in their plane by belts between the ceilings and a suitable peripheral ring beam.

The reliability of the joints depends, inter alia, on their geometric shape and their execution. Fine sections, shrinking cracks and lack of precision in execution may cause failures which have not been taken into the account of stability.

VERTICAL LOADS

What characterizes precast constructions from the point of view of passage of vertical loads are the bearing walls with a big slenderness with a minimum reinforcement and sometimes with no reinforcement at all.

The load carrying capacity of such a bearing wall is influenced by the buckling following the big slenderness, by the eccentricity resulting from inaccuracies in execution and by eccentricity of the loads. In order to illustrate the buckling and eccentricity problems in precast constructions with their bearing walls, an example of curves was prepared [5] [6] on the basis of "CEB" recommendation [1] , as follows:

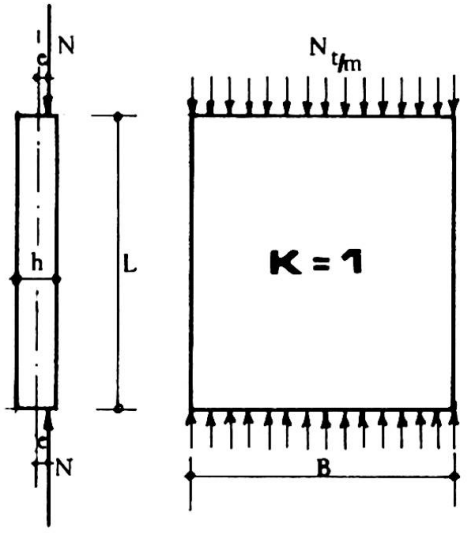

Figure (5)
Assumption is that the vertical ends are free

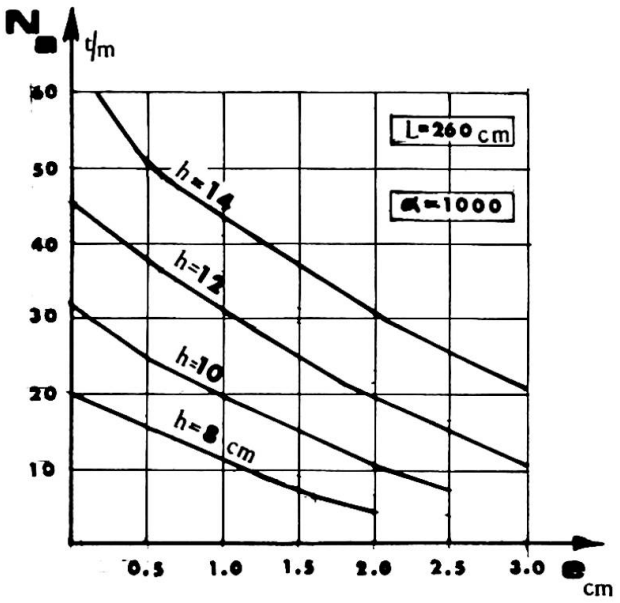

Figure (6)
Allowed load on walls as function of eccentricity for height of L = 260cm. and α = 1000

N_u - The load carrying capacity of the wall taking into consideration buckling.

$$N_u = \varphi N = \varphi\left(\frac{e^*}{h}; \bar{\lambda}\right) \times \sigma_b \times A_b \qquad (6)$$

$$\bar{\lambda} = \frac{L}{h\sqrt{\alpha}} \qquad (7)$$

CONCLUSION

Precast buildings have specific stability problems both from the horizontal and vertical points of view. These subjects require the continuation of research and development.

REFERENCES:

[1] C.E.B. : "Recommandations Internationales pour les Structures en Panneaux" - IAITEC - Roma - 1969.

[2] S.E.A.O.C. : "Recommended Lateral Force Requirements" - San Francisco - 1967.

[3] REGLES P.S.69: "Règles Parasismiques 1969 et Annexes" - Paris - 1970.

[4] J. DESPEYROUX: "Progressive Collapse" 5th CIB Congress - Paris - 1971.

[5] J. VARSANO : "Statistical Problems in Three Dimensional Precast Units" "CIB W-19 S-56 - International Box Units Symposium" - Hungary - May 1973.

[6] J. VARSANO : "Structural Design of Precast Shells" - "IASS - International Symposium on Prefabricated Shells" - Israel - Sept. 1973.

[7] J. VARSANO : "Approximate Analysis of Multi-Storey Buildings" - "CIB S-41 - Symposium on Tall Buildings" - Moscow - Oct. 1971.

SUMMARY

In spite of their great rigidity, the precast buildings have specific stability problems, determined in a decisive way by the sensitivity of the connections between elements. The function of the joints is to secure the stability of the structure to horizontal and vertical forces, and to prevent a general destruction as a result from a "progressive collapse".

RESUME

En dépit de leur grande rigidité, les bâtiments préfabriqués ont des problèmes spécifiques de stabilité, déterminés par la sensibilité des joints entre les éléments. La fonction de ces joints est d'assurer la stabilité de la structure soumise à des forces horizontales et verticales, et d'empêcher une destruction générale découlant d'un effondrement de proche en proche.

ZUSAMMENFASSUNG

Vorgefertigte Hochbauten zwigen eine grosse Steifigkeit. Trotzdem existieren Stabilitätsprobleme, die vorwiegend auf die Verbindungen zwischen den einzelnen Elementen zurückzuführen sind. Die Verbindungen müssen die Stabilität der Tragwerke unter vertikalen und horizontalen Lasten sicherstellen und fortschreitendes Versagen verhindern.

Tests of Cantilever Action in Damaged Large Panel Structures

Essais sur l'action en porte-à-faux de structures endommagées, composées de grands panneaux

Untersuchung des Kragverhaltens in beschädigten Konstruktionen der Grossplattenbauweise

N.W. HANSON
Principal Structural Engineer

H.G. RUSSEL
Manager

W.G. CORLEY
Director

D.M. SCHULTZ
Senior Structural Engineer

M. FINTEL
Director

Portland Cement Association
Skokie, Illinois, USA

1. HIGHLIGHTS

This report describes initial tests being conducted in a major investigation to develop criteria for design and construction of large panel concrete structures. The tests were carried out to determine the stability of large-panel structures in the event of partial loss of support caused by the ineffectiveness of a lower panel. Details of the test structures are intended to permit panels above the one removed, to act as cantilevers from the adjacent undamaged structure.

The tests were carried out to determine if the cantilever portion acted as a single unit, as individual story-high cantilevers or as some intermediate structure. In addition, data needed to design a comprehensive test series were obtained.

A 3/8-scale model representing an end wall of a 6-story large panel building was assembled using details common to North American construction. To represent the ineffective support, one-half of the first story end wall was omitted. As load was applied at each floor level, stresses in the connecting tension ties at each floor level were measured. Tests were conducted for cantilevers of 2 stories, 3 stories, 4 stories and 5 stories. Finally, the 5-story cantilever was loaded to destruction.

Partial movement of joints between panels and floor elements prevented the cantilever from acting as a single unit and complicated the structural behavior. Measured story load versus deflection relationships indicate that performance of the 5-story cantilever was similar to that calculated for a 2-story cantilever.

Measured stresses in the tension ties at each floor level were consistently less than the calculated values.

2. TEST STRUCTURE

Construction and testing started with a 2-story cantilever as shown in Fig. 1.

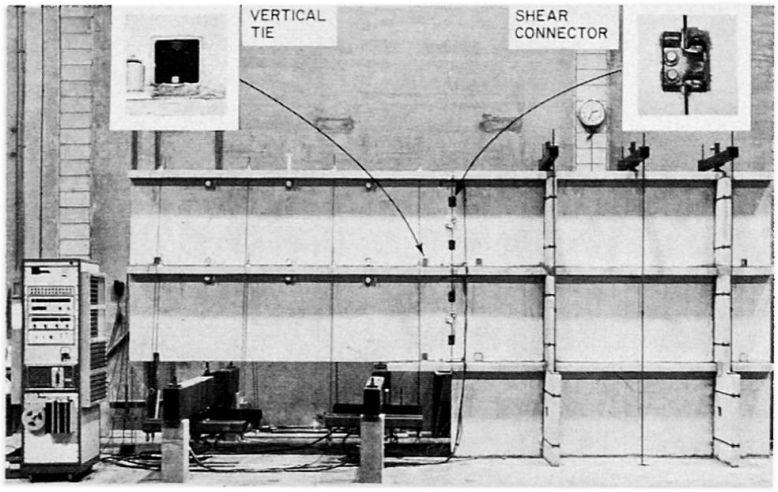

Fig. 1 - Two Story Cantilever

Wall panels were 3-in. (76 mm) thick, 36-in. (914 mm) high and 11-ft. 3-in. (3.4 m) long. Two shear connectors were used at the vertical joint between panels at each story. Hollow core slabs spanning between wall panels were represented in the test structure by short stub sections. The floor stub elements were 3-in. (76 mm) thick to represent 8-in. (203 mm) thick slabs in the prototype structure. Spaces between the ends of the slabs were provided by a 1-in. (25 mm) wide slot through the length of the element.

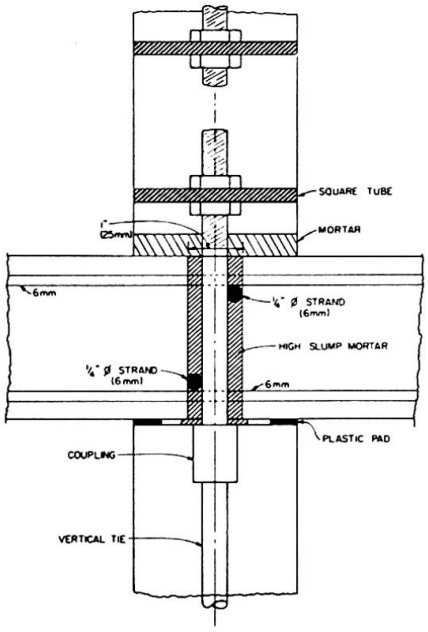

Fig. 2 - Joint Details

In Fig. 2, a detail of the joint at a vertical tie shows the horizontal tie consisting of 1/4-in. (6.4 mm) strand. This tie was placed in the slot between ends of the floor stubs and was continuous the length of the specimen. A fluid mortar was placed in the joint shown in Fig. 2.

After the floor slab stubs were placed, a wall panel was positioned over the joint. Dry mortar was then packed between the floor element and the wall panel above. Continuous vertical ties located 11 1/4-in. (285 mm) from each end of each wall panel were used to tie the newly placed panel to the structure.

Deflections, applied loads, strains in the ties, and joint movements were measured.(1) Strain gaged load cells were used to sense applied loads. A linear potentiometer was used to measure cantilever deflection. Strains in ties were sensed with bonded electrical resistance strain gages. Dial gages were used to sense horizontal and vertical joint slip. Vertical joint opening was monitored with potentiometers.

3. TEST PROGRAM

The cantilever structure was tested using hydraulic jacks to apply force through loading rods to 8 points on each floor. The load was applied in increments to a maximum representing full dead load and one-third of design live load. This combination was selected as representative of ordinary residential loading.(2,3)

At completion of the test on the 2-story cantilever, the free end was jacked back to its original position. A new story was added to the top of the test specimen to form a 3-story cantilever. The test load was then applied to the new structure. This process was repeated until a 5-story cantilever had been constructed and tested.

After dead load plus one-third of design live load had been applied, the complete 5-story cantilever structure was loaded to destruction. As load was increased, the vertical ties connecting the bottom panel to the structure fractured, as shown in Fig. 3. Continued loading produced additional tie fractures until only the top panel remained. Further application of load resulted in slip between the panel and the floor above.

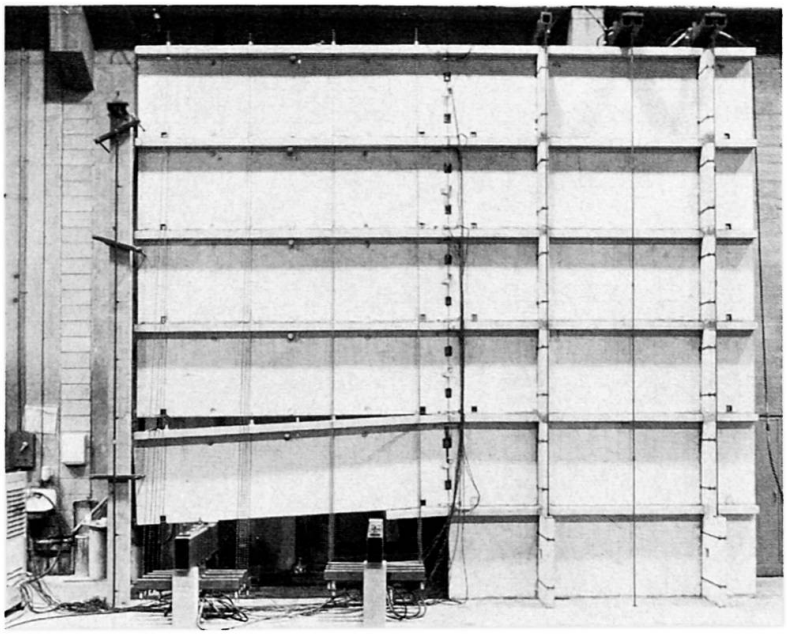

Fig. 3 - Test Structure After Fracture of Vertical Tie at Floor Level 2

4. TEST RESULTS

Measured story load versus deflection relationships for each service load test are shown in Fig. 4. The test load of 8.2 kips (36.4 kN) per story is marked on the load axis.

Measured deflections of the 5-story cantilever as it was loaded to destruction are shown in Fig. 5. Comparison of measured

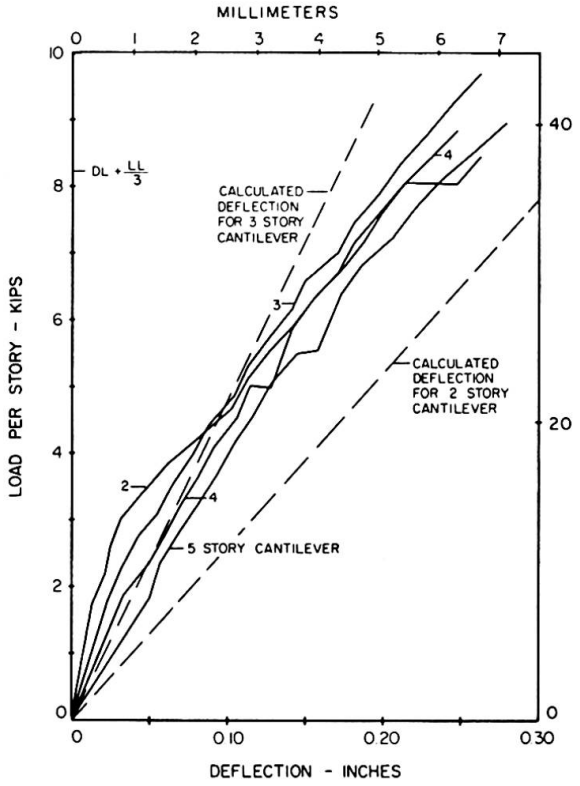

Fig. 4 - Measured Deflections at Low Loads

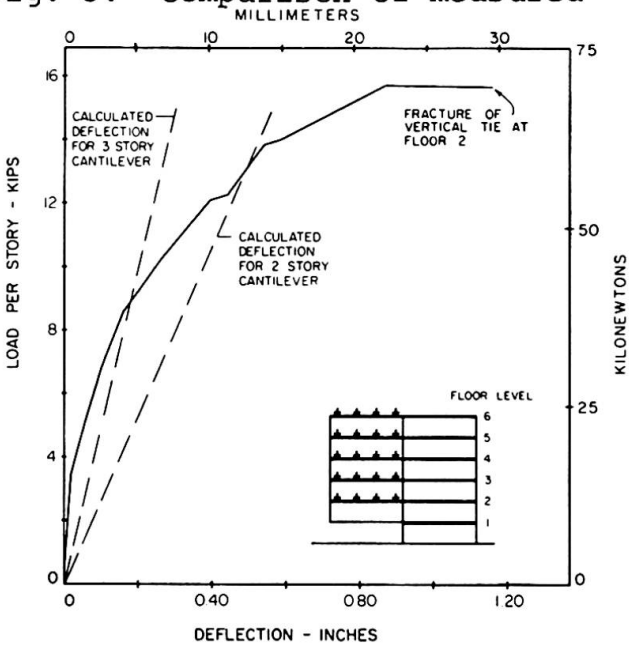

Fig. 5 - Deflection Measured During Test to Destruction

deflections with those calculated suggests that the upper two stories did not act compositely at higher loads.

Measured load versus strand stress in the 2-story cantilever is shown in Fig. 6. Figure 7 shows load versus strand stress for the test to destruction. In all cases the observed strand stress was substantially lower than values calculated assuming a cracked composite section. For example, the calculated maximum stress on the 3-story cantilever at a load of 8.2 kips (36.4 kN) per story was 105 ksi (724 MPa). Stress obtained from measured strain was about 55 ksi (380 MPa).

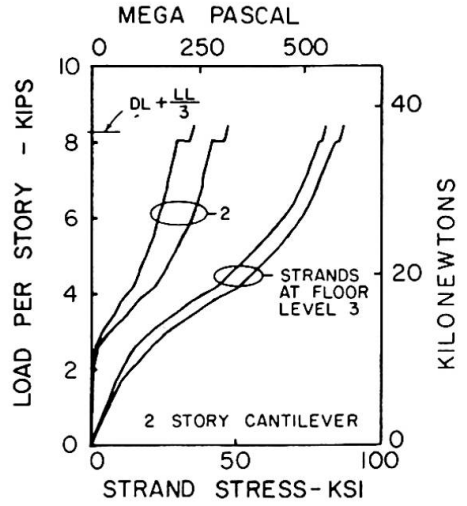

Fig. 6 - Measured Strand Stress

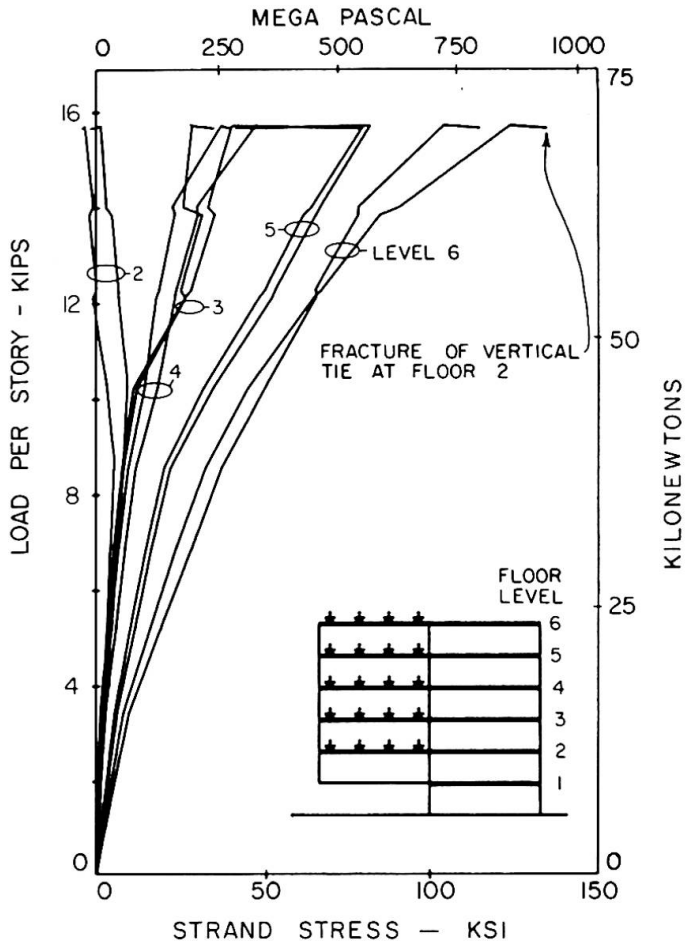

Fig. 7 - Strand Stress During Test to Destruction

The differences between measured and calculated deflections and stress are attributed to slip at the horizontal joints in the lower stories. Slip measured during the test to destruction is shown in Fig. 8.

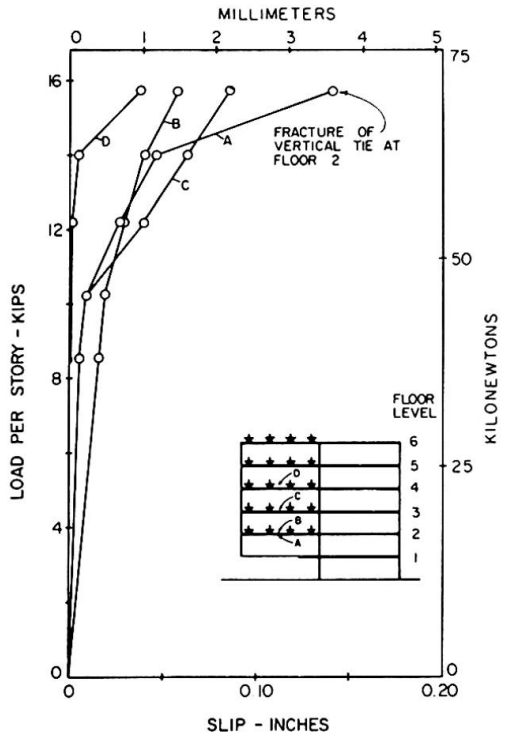

Fig. 8 - Slip During Test to Destruction

5. CONCLUSIONS

These tests indicate that large panel structures as built in North America can be constructed so that progressive collapse is avoided even when large portions of lower story supports become ineffective. Further testing and analysis will be directed toward determining minimum tie requirements to ensure self-support of the wall panels in the event of catastrophic loss of a lower panel.

6. ACKNOWLEDGMENT

Research forming the basis for this publication was conducted under a contract with the Department of Housing and Urban Development. The substance of such research is dedicated to the public. Statements and conclusions contained herein do not necessarily reflect the views of the U.S. Government in general or HUD in particular.

7. REFERENCES

1. Hognestad, E., Hanson, N. W., Kriz, L. B., and Kurvitz, O. A., "Facilities and Test Methods of PCA Structural Laboratory," papers under various titles in Journal of the PCA Research and Development Laboratories, V. 1, No. 1, Jan. 1959, pp. 12-20, 40-44; V. 1, No. 2, May 1959, pp. 30-37; and V. 1, No. 3, Sept. 1959, pp. 35-41; reprinted jointly as PCA Development Department Bulletin D33.

2. Schultz, D. M., and Fintel, M., "Design and Construction of Large Panel Concrete Structures," Report 1, Loading Conditions. Portland Cement Association, Skokie, Ill., April 1975, 65 pages.

3. Fintel, M., Schultz, D. M., and Iqbal, M., "Design and Construction of Large Panel Concrete Structures, Report 2, Structural Response of Large Panel Buildings to Normal and Abnormal Loads," Portland Cement Association, Skokie, Illinois. (To be published.)

SUMMARY

This report describes a part of a major study to develop design criteria to minimize the possibility of progressive collapse. Large panel precast concrete structures as built in North America were considered. A 3/8-scale structure representing an end wall of a 6-story building was constructed and tested. The tests were used to determine the stability of large panel structures in the event of partial loss of support by accidental removal of a lower panel. Results of these tests indicate that if suitable details are provided, progressive collapse can be avoided even when large portions of lower stories become ineffective.

RESUME

Une étude majeure a été entreprise afin de développer des règles de dimensionnement pour minimiser la possibilité d'effondrement de proche en proche, dans le cas de grands panneaux préfabriqués pour structures en béton construites en Amérique du Nord. Une structure à l'échelle 3:8, représentant la paroi extrême d'un bâtiment de six étages fut construite et soumise à l'épreuve. Les essais devaient déterminer la stabilité de la structure composée de grands panneaux en cas de perte partielle d'appui, par suite du déplacement accidentel d'un panneau inférieur. Les résultats de ces essais ont montré qué des détails constructifs bien conçus peuvent éviter l'effondrement de proche en proche, même lorsqu'une partie importante des étages inférieurs disparait.

ZUSAMMENFASSUNG

Um den fortschreitenden Einsturz der in Nordamerika aus grossen Betonfertigteil-Platten hergestellten mehrstöckigen Bauten auszuschliessen, wird zur Zeit eine grosse Untersuchung durchgeführt mit dem Ziel, entsprechende Bemessungsregeln zu entwickeln. Im Rahmen der Untersuchung wurde ein Modell der äusseren Wand eines 6-stöckigen Gebäudes im Massstab 3/8 hergestellt und unter der Belastung geprüft. Die Versuche dienten zur Bestimmung der Stabilität solcher Bauten unter der Voraussetzung, dass die untere Platte zufälligerweise ausfällt. Die Versuchsergebnisse haben gezeigt, dass bei Anordnung geeigneter Massnahmen ein fortschreitender Zusammenbruch vermeidbar ist, selbst wenn grosse Teile der unteren Stockwerke nicht mehr wirksam sind.

Structural Safety of Precast Concrete Apartment Houses against Earthquake

La sécurité structurale de bâtiments d'habitation en béton précontraint vis-à-vis des tremblements de terre

Die konstruktive Sicherheit von Wohnhäusern aus Betonfertigteilen gegen Erdbeben

SHIN OKAMOTO MASAYA HIROSAWA KEIICHI OTANI

TONEO ENDO TOSHIYUKI KUBOTA

Research Engineers of Building Research Institute, Ministry of Construction
Tokyo, Japan

1. Introduction

This report discusses the structural safety of publicly operated precast concrete apartment house develped in Japan, based upon the tests on full-size housing structures, carried out in the Large Size Structures Testing Laboratory.

This laboratory has a double decked testing bed of 9.5 m x 20 m in plan, and a vertical reaction wall of 16.1 m in height as shown in Fig. 1. Horizontal loads can be applied both in pushing and pulling direction against the reaction wall by means of 20 oil jacks of 50 ton capacity each. Three dynamic exciters of the maximum capacity of 10 ton power each were also furnished to perform forced vibration tests.

2. Construction systems and test specimens

Four tests have been carried out in the above laboratory since 1967 to provide the basic data in regard to the rationalization and the economization of the earthquake resistant design of precast concrete structures.

The outline of the test specimens and some connection details are summarized in Fig. 3 to 7.

The first test was concerned with the 5-story precast concrete large panel construction. Horizontal connections between concrete panels were made by welding of steel plates anchored in these panels. Vertical connections were cast-in-place connections. Each panel had six shear keys and reinforcing bars of 9 mm diameter anchored in the center of each shear key were welded to the vertical reinforcing bars placed through vertical joints. The test specimen consisted of ten housing units as shown in Fig. 7-1.

The second test was carried out in order to realize an 8-story apartment buildings with precast concrete large panel constructions. In this case, the splice sleeves filled with non-shrink mortar were used to connect vertical reinforcing bars cast in precast wall panels instead of welding connections. The test specimen shown in Fig. 7-2 represented the transversal shear wall structure of real 8-story apartment building.

The third test was concerned with the precast concrete structure assembled with post-tensioning method. This housing structure consisted of following

precast reinforced concrete elements: L, +, T, I shaped wall columns, shaped girders and slabs. Prestressing bars anchored in underground girders cast-in-place were extended through wall columns and girders and tensioned and grouted after completion of assembly works of every five stories. The outline of this construction system is summarized in Fig. 5. Specimen 3-1 was the 4-story wall frame structure consisting of full size structural elements almost same as those of the lower 4-story of a real 8-story apartment building. Specimen 3-2 corresponded to transversal wall frame structure full-filled with bearing wall.

The last test was intended to realize an 11-story precast concrete apartment building which had 14-bay rigid frame structures in the ongitudinal direction and shear wall structures in the transversal direction. The typical precast reinforced concrete member in the rigid frame structure had double cross shape as shown in Fig. 6-a). These members were connected each other at the ends of the each member, that is at the mid-span of beams and columns of the frame structure. The longitudinal reinforcing bars were connected with screws in the beams and with splice sleeves filled with non-shrink mortar in the columns. The transversal shear wall consisted of precast wall panels with top beam. Connection details between wall panels and columns are shown in Fig. 6-d). The specimen 4-1 was of a 4-story full size model representing the rigid frame of an 11-story building, and specimen 4-2 was of an 8-story half size model representing the transversal shear wall structure.

3. Test procedure

In each test, a specimen was fixed to the testing bed and horizontal loads were applied to the specimen using oil jacks fixed to the vertical reaction wall. The distribution of horizontal loads in each test is shown in Fig. 8. Except the first test, vertical axial loads representing the dead and live loads of the upper portion of an actually designed building were also applied during horizontal loading as shown in Fig. 2.

The test specimen was loaded staticaly up to collapese in the horizontal direction. In the test No.1 and No.3 some supplemental forced vibration tests were carried out to clarify the change of dynamic properties such as natural period and damping, according with the progressing of failure.

4. Test result

The principal test results on static horizontal loading are summarized in Table 1 and Fig. 8. The ordinate and abscissa of Fig. 8 show the ratio of total applied loads in each test to the sum of dead weight and additional live loads supposed to be beared in the corresponding portion of the actually designed building and the translation angle defined as the ratio of total horizontal displacements measured at the top of the specimen to the total height of it, respectively. The design load was defined, hereafter, as the loads corresponding to 20% of the above mensioned gravity loads.

Specimen 1 : Flexure cracks appeared in beams just at the design load. As the load increased, flexure cracks in beams and shear cracks in walls progressed successively. The maximum load carrying capacity attained to 7.6 times design load with the translation angle of 13.5×10^{-3} at the second floor and of 2.7×10^{-3} at the top. Considerable decreasing of load carrying capacity due to shear failure of wall panels was observed after the maximum load. The natural period and damping obtained from the forced vibration tests were 0.1 sec. and 6.3%, respectively before static loading test and 0.17 sec. and 10.6%, respectively after maximum load attained.

Specimen 2 : Initial shear cracks appeared in the coupling beams at 2.5 times design load. The maximum load carrying capacity was attained at the 4.8 times design load with the translation angle of 5.1×10^{-3} at the top. The coupling beams had heavily failed in shear before reached to the maximum load.

The final translation angle at the top was 21.7 x 10^{-3}.

Specimen 3-1 : The load displacement curves indicate a fairly linear relation up to 1.2 times design load. At this stage, no column cracks but slight cracks of girders were observed. The initially linear stiffness decreased gradually beyond this loading stage with gradual increase of horizontal slippage and progressing of bending cracks of wall columns and girders. The maximum load carrying capacity attained to 3.9 times design load, with the translation angle of 12.2 x 10^{-3} at the 2nd floor and of 9.7 x 10^{-3} at the top. The final failure mechanism was the shear failure of 2nd and 3rd floor beams and further repeating of load did not cause significant decrease of load carrying capacity up to the translation angle of 24.4 x 10^{-3} at the 2nd floor and of 16.1 x 10^{-3} at the top. The natural period and damping obtained from forced vibration tests were 0.12 sec. and 2% before applying any static load and 0.28 sec. and 7 to 9% after failure, respectively.

Specimen 3-2 : The load-displacement curve show linear relation up to 2 times design load. Beyond this loading stage, the vertical slippage between wall columns and bearing walls occured. The stiffness of the structure decreased rapidly after the applied load reached to 3.5 times design load due to occurreuce of shear cracks of wall columns and progressing of shear cracks of beams just above the vertical joint between wall columns and bearing walls. The maximum load carrying capacity was about 4 times design load and the translation angle at this loading stage was 5.3 x 10^{-3} at the 2nd floor and 3.8 x 10^{-3} at the top. The decreasing of load carrying capacity was about 36% of the maximum value at the translation angle of 10.2 x 10^{-3} at the top.

Specimen 4-1 : Before reached to the design load, bending cracks of beams and columns had progressed extensively. Diagonal shear cracks in the panel zone of the beam-column connection occurred almost at the design load. At 1.7 times design load yielding of the main reinforcing bars at the ends of columns and beams and compression failure of concrete at the top of the 4-th story column and at the bottom of the 1st story column started. The maximum load carrying capacity was 1.8 time design load. The final displacement reached to 4.5 times the displacement at the yield load not showing any decreasing of load carrying capacity. This frame structure showed very ductile behaviour under horizontal loading, because the flexural failure at beams and columns was dominative instead of shear failure of the members in the other specimens.

Specimen 4-2 : The bending cracks at the 1st story column-column connection appeared at 1.3 times design load and considerable increase of crack width at this portion was observed in successive loading. The maximum load carrying capacity was 2.1 times design load at the translation angle of 4 x 10^{-4} at the top. Beyond the maximum load, significant decrease of load carrying capacity was observed, because of the slipping out of longitudinal reinforcement at the 1st story column-column connection.

5. Concluding remarks

In case of precast concrete structures, it is not always easy to estimate the structural behaviour as a whole up to failure with analytical procedures, because of not only the difficulty of making model representing the behaviour of connection, but also the difficulty of considering the soundness of the structure affected by construction works. Tests on full scale structure as mentioned above give us the direct informations for estimating the soundness of structures as a whole under the earthquake loading. Further accumulation of such test datum will make us possible to estimate the extent of damage caused by earthquake more precisely and bring us the economization and the rationalization of earthquake resistant design of such the structures.

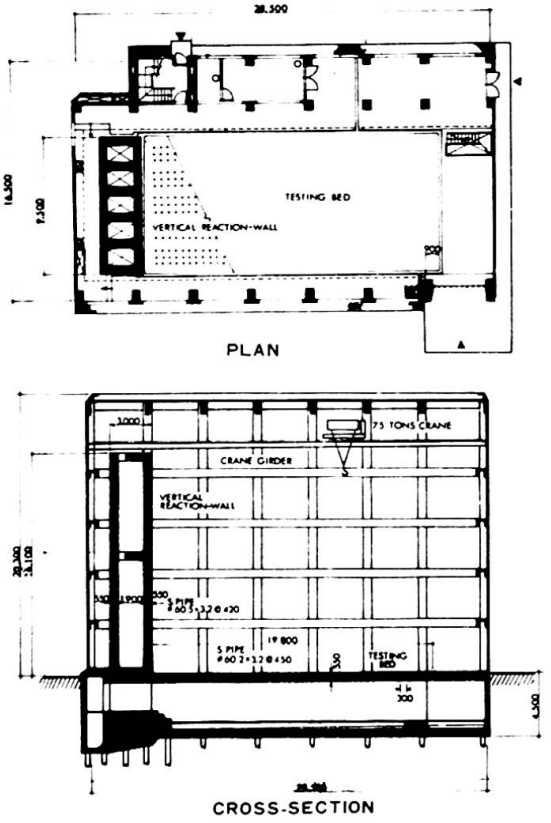

Fig. 1 Outline of Large Size Structure Testing Laboratory

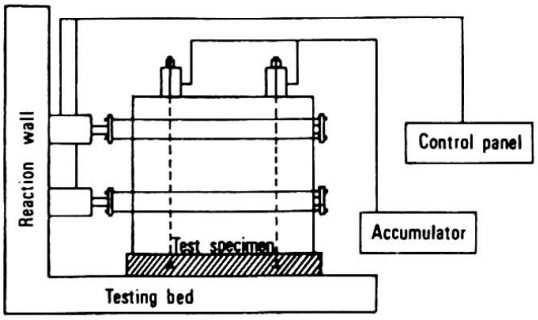

Fig. 2 Block Diagram of Loading Facilities

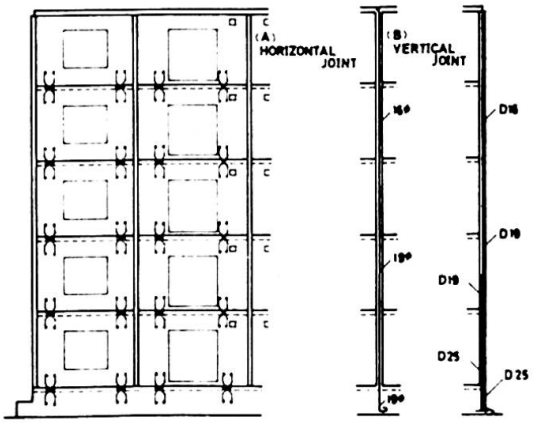

Fig. 3 Detail of Construction System of Specimen 1

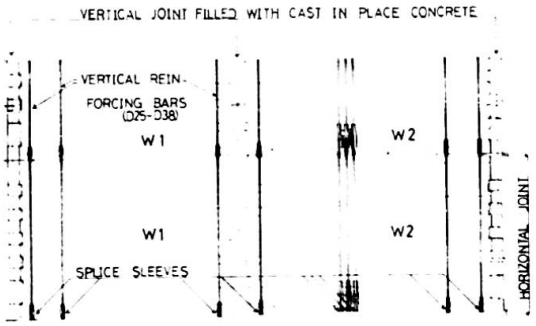

Fig. 4 Detail of Construction System of Specimen 2

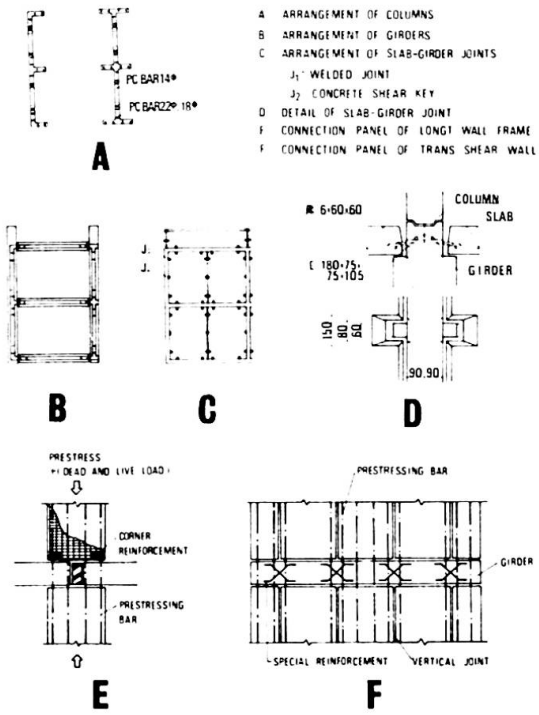

Fig. 5 Detail of Construction System of Specimen 3

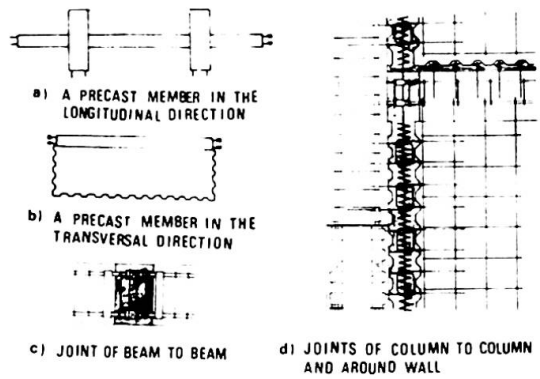

Fig. 6 Detail of Construction System of Specimen 4

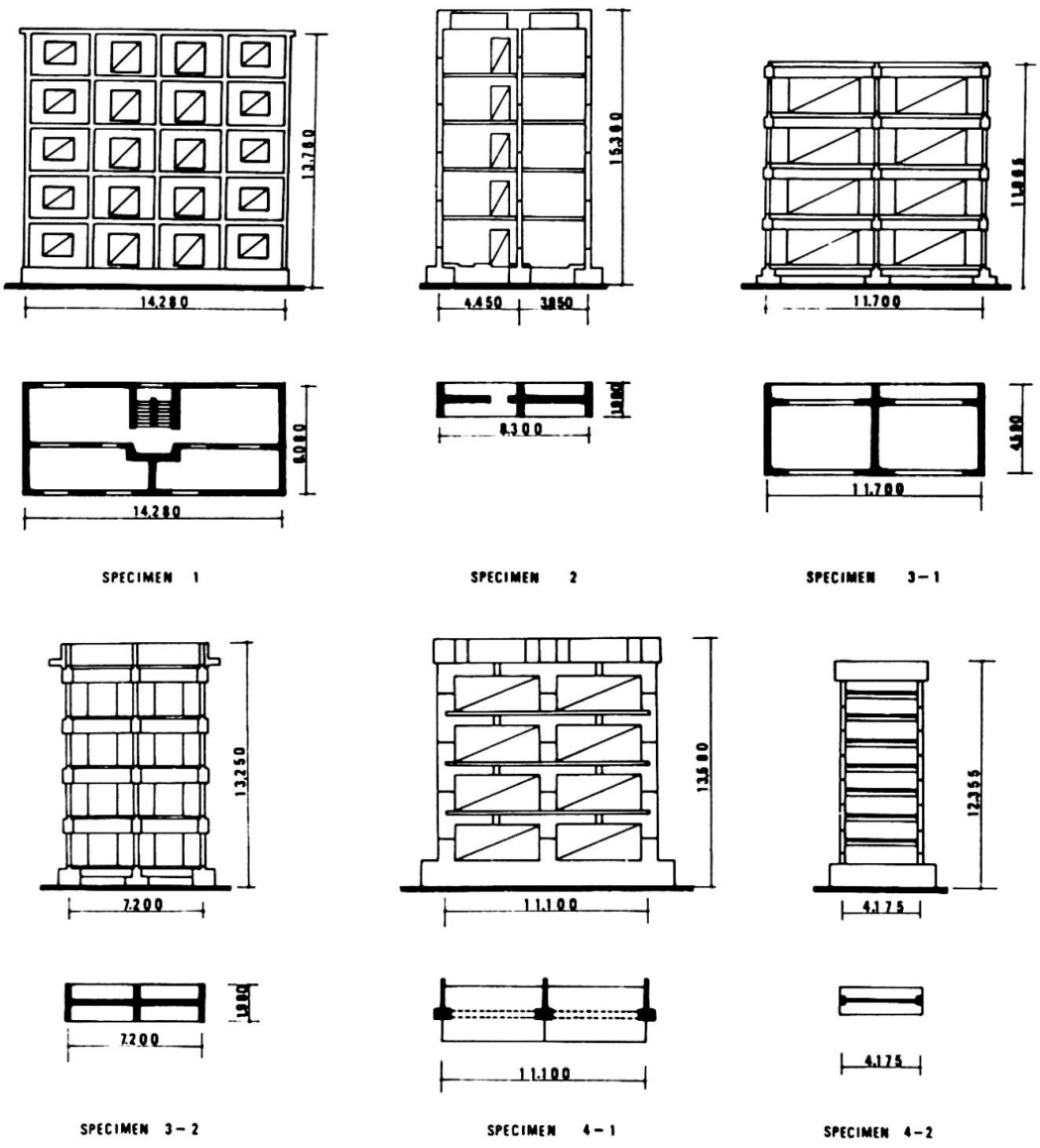

Fig. 7 Outline of Test Specimen

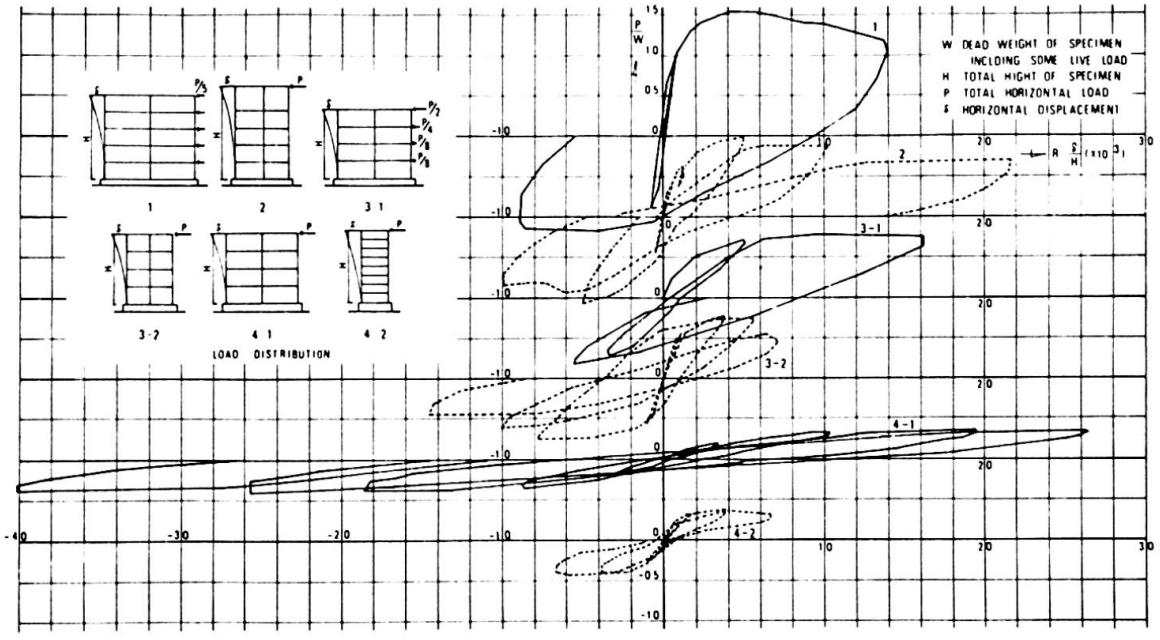

Fig. 8 Dimensionless Load-displacement Curves

Table 1 Result of Test

NO.		1	2	3		4	
				3-1	3-2	4-1	4-1
CONSTRUCTION SYSTEM		R.C. LARGE PANEL CONSTRUCTION	R.C. LARGE PANEL CONSTRUCTION	P.C. CONSTRUCTION		R.C. FRAME CONSTRUCTION	
STRUCTURAL TYPE OF SPECIMEN		SHEAR WALL	SHEAR WALL	WALL FRAME	SHEAR WALL	RIGID FRAME	SHEAR WALL
NUMBER OF FLOORS OF TEST SPECIMEN (OF REAL BUILDING)		5	5 (8)	4 (8)	4 (10)	4 (11)	8 (11) (HALF SCALE MODEL)
THICKNESS OF WALL (cm)		15	18.25	18	18	–	7.5
SECTION (cm)	BEAM	–	–	30 × 74	30 × 74	40 × 55	20 × 27.5
	COLUMN	–	–	–	–	55 × 87	27.5 × 43.5
SECTIONAL AREA OF WALL OR COLUMN PER UNIT FLOOR AREA (cm^2/m^2)		425	317	247	244	207	421
LENGTH OF WALL PER UNIT FLOOR AREA (cm/m^2)		28.3	16.7	13.7	13.6	–	18.0
REINFORCEMENT RATIO FOR SHEAR (%)		0.34	0.44	0.63	0.64	1.27	0.56
CONCRETE STRENGT (kg/cm^2)		230	335	380	414	400	320
MEAN SHEAR STRESS AT THE DESIGN LOAD BASED ON k = 0.2 (kg/cm^2)		2.4	3.8	8.1	7.8	9.1	4.7
MEAN SHEAR STRESS OF WALL AT THE MAXIMUM LOAD (kg/cm^2)		17.1	18.8	31.5	30.3	16.3	9.5
τ_u/τ_b		7.2	3.3	3.9	3.9	1.8	2.0
COLLAPSE MECHANISM		SHEAR FAILURE OF WALL COLUMN	SHEAR FAILURE OF COUPLING BEAMS	SHEAR FAILURE OF BEAM	SHEAR FAILURE OF BEAM	FLEXURAL FAILURE OF COLUMN AND BEAM	FAILURE CAUSED BY SLIPPING OUT OF REINFORCEMENT AT JOINT OF COLUMN
TRANSLATION ANGLE OF THE FIRST STORY AT MAXIMUM LOAD (10^{-3})		7.8	4.2	20.8	22.2	20.0	5.9

* R.C.; Reinforeced concrete, P.C.; Prestressed concrete

SUMMARY

This report discusses the structural safety against earthquake of precast concrete apartment houses developed in Japan. The evaluation is based upon tests on full-size model structures. The results show that the construction system of precast elements have a sufficient load carrying capacity and ductility to resist severe earthquakes.

RESUME

La sécurité structurale des bâtiments d'habitation préfabriqués en béton, développée au Japon vis-à-vis des tremblements de terre, a été testée sur des essais en vraie grandeur. Les résultats montrent que les capacités portante et de déformation de ce type de construction sont suffisantes pour résister à de sévères tremblements de terre.

ZUSAMMENFASSUNG

Die Abhandlung beschreibt die konstruktive Sicherheit von in Japan entwickelten Wohnbauten aus Betonfertigteilen. Die Untersuchung gründet sich auf Versuche im Massstab 1:1. Die Resultate zeigen, dass Konstruktionen aus Betonfertigteilen ausreichende Tragfähigkeit und genügendes Verformungsvermögen aufweisen, um auch schweren Erdbeben zu widerstehen.

Trag- und Verformungsverhalten aus einzelnen Fertigteilen zusammengesetzter Wand- und Deckenscheiben

Strength and Deformation Behaviour of Walls and Floors composed of Precast Elements

Résistance et déformation des dalles et murs composés d'éléments préfabriqués

GERHARD MEHLHORN HEINZ SCHWING
Institut für Massivbau, TH Darmstadt
Darmstadt, BRD

1. Problemstellung

Für die Aussteifung zahlreicher Gebäude ist das Zusammenwirken von einzelnen Fertigteilen als großflächige Scheibe ausschlaggebend. Das Trag- und Verformungsverhalten dieser Scheiben wird im wesentlichen von dem der Fugen beeinflußt. Da der Spannungszustand der Fugen in Abhängigkeit von ihrer Lage innerhalb der Scheibe sehr unterschiedlich sein kann, sind reine Scher- oder Druckversuche an Fugen nicht ausreichend für die Beurteilung des Verhaltens von Scheiben. Versuche an Scheiben im Maßstab 1:1 sind sehr aufschlußreich; ihre Ergebnisse sind jedoch nur anwendbar, wenn gleiche Fertigteiltafeln, Verbindungsmittel und Auflagerbedingungen vorhanden sind. Es liegt daher nahe, ein allgemeingültiges Rechenverfahren zu entwickeln, in dem Scheiben mit beliebigen Fugen-und Auflagerbedingungen berechnet werden können. Aus diesem Grunde wurde aufbauend auf [1] ein Rechenprogramm nach der Methode der finiten Elemente entwickelt [2] , [3], in dem das Trag- und Verformungsverhalten der Fugen, in Erweiterung eines Grundgedankens von Franklin [4] , durch orthogonale Federn simuliert wird. In diesem Beitrag werden die wichtigsten Ergebnisse der Auswertung von Belastungsversuchen, die für die Steuerung des Fugentrag- und Verformungsverhaltens im Rechenprogramm Anwendung finden, sowie wesentliche Ergebnisse der rechnerischen Untersuchungen mitgeteilt.

2. Trag- und Verformungsverhalten von Fugen

In [1] bis [3] sowie [5] und [6] werden Auswertungen zahlreicher Versuchsergebnisse über Fugen in Fertigteilwänden und -Decken angegeben. In [7] werden Ergebnisse numerischer Parameteruntersuchungen an Wand-Decken-Knoten mitgeteilt.

Die Schubtragfähigkeit von Fugen hängt im wesentlichen von den Parametern Fugengeometrie, (Randprofilierung), Bewehrung (Bewehrungsgrad, Anordnung der Bewehrung) und der Betongüte ab. Für die in Bild 1 definierte Fugenausbildung beträgt der Mittelwert der Bruchschubspannung für Fugen mit
a) glatten Fugenrändern

$$\tau_u = 0.047 \cdot (\mu \beta_s + \sigma_N) \cdot \sqrt{\beta_p} \qquad (2.01)$$

b) verzahnten Fugenrändern mit verteilter Bewehrung (Schlaufen)

$$\tau_u = \sqrt{\beta p \cdot \frac{B}{Fu} (o,4 + o,44 (\mu \beta_S + \sigma_N))} \qquad (2.02)$$

Bei extremen Verhältnissen $\mu\beta_S/\sigma_N$ ist die additive Wirkung der beiden Einflüsse mit Vorsicht zu handhaben, da die Bewehrung erst nach einer Rißbildung die Fließgrenze erreichen kann. Für unterschiedliche Randprofilierungen, definiert durch die bezogene Zahnfläche B/Fu sind in Bild 1 die Auswertung der Gleichungen (2.01) und (2.02) dargestellt. Nach den in [6] beschriebenen Versuchen ergibt sich bei sonst gleicher Ausbildung der Fugen (Fugenrandausbildung, Bewehrungsgrad, Betongüte) für eine am Fugenrand konzentrierte Bewehrung (Abstand 2,5 m) eine um 2o - 3o % geringere Bruchlast als für eine über die Fugenlänge verteilte Bewehrung.

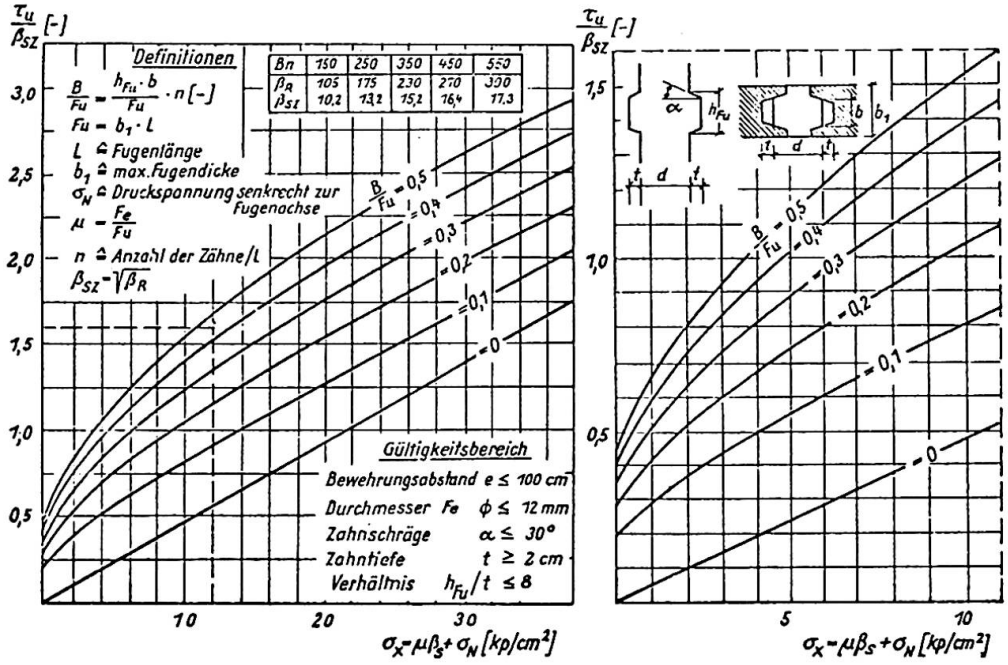

Bild 1: Kurventafel zur Bestimmung des erforderlichen Fugenbewehrungsgrades $\mu = F_e/F_u$ bei vorgegebener Schubspannung τ_u

Ein Spektrum von τ - σ-Beziehungen für den gesamten Schub- und Druckbruchbereich ist aus Bild 2 zu ersehen. Im Schubbruchbereich entspricht die untere Begrenzungsgerade der Charakteristik einer Fuge mit glatten Rändern, die obere Begrenzungskurve der einer verzahnten Fuge.

Typische Schubspannungs-Verschiebungsbeziehungen aus eigenen Versuchen [6] sind in Bild 3 dargestellt. Die Fugensteifigkeit, definiert als Sekantenmodul $K = \tau/\Delta$ ergibt sich für den Bruch nach [2] zu:

$$K_u = 6.8\ \mu \beta_S + 454 \cdot B/Fu \quad [kp/cm^2] \qquad (2.03)$$

Die oben angegebenen Fugencharakteristiken können direkt als Bemessungshilfen für die Ingenieurpraxis oder aber auch als Eingabewerte für das Rechenprogramm [2] , [3] Anwendung finden.

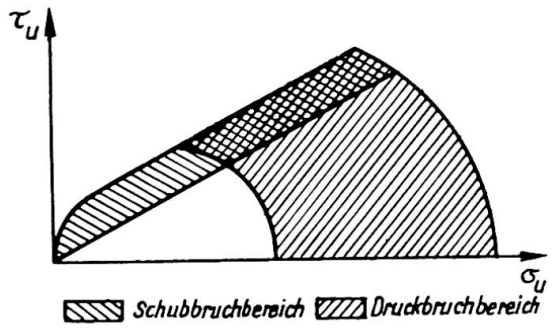

Bild 2: Spektrum von τ - σ - Beziehungen

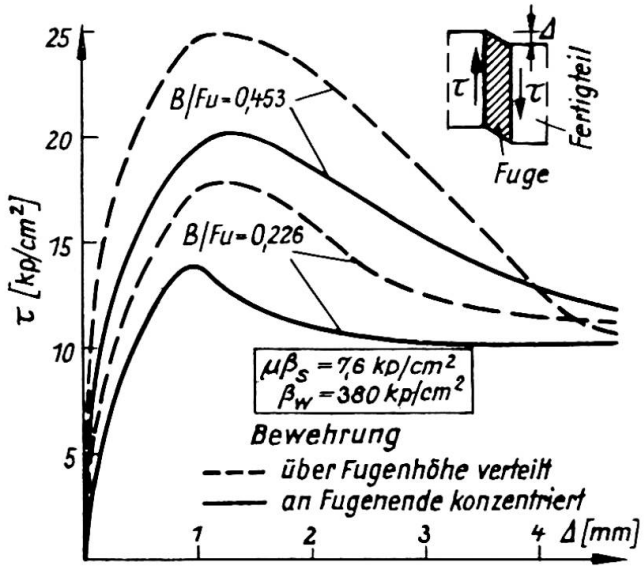

Bild 3: Schubspannungs-Verschiebungsbeziehungen

3. Tragverhalten von Wandscheiben aus Fertigteilen

Vertikalfugen von Wandscheiben übertragen im wesentlichen Schubkräfte. Üblicherweise haben diese Fugen geringere Breiten als die Wandtafeln. Infolge Zwangsbeanspruchungen der Wände sind die Kontaktflächen zwischen Fugenverguß und Fertigteiltafeln meistens gerissen. Dadurch ist eine reduzierte Schubübertragung der Fugen bedingt. Die Schubsteifigkeit derselben kann versuchsmäßig ermittelt werden, siehe Gleichung (2.03) und im Rechenprogramm zur Steuerung des Verformungsverhaltens der Fugen berücksichtigt werden.

Für die Horizontalfugen wird die Schubübertragung nicht als kritisch erachtet, da sie im allgemeinen durch Reibung gewährleistet ist. Demgegenüber kann die Drucktragfähigkeit der Fugen infolge der heterogenen Zusammensetzung des Wand-Decken-Knotens gegenüber monolithisch hergestellten Wänden stark reduziert sein, Beispiele siehe z.B. in [2] , [7] .

Unter der Annahme, daß alle Horizontalfugen überdrückt sind, und ihre Schubverformung vernachlässigt werden kann, ergeben sich die in Bild 4 [8] dargestellten Abminderungsfaktoren für die Trägheitsmomente der Wand bei Berücksichtigung der Schubverformung der Vertikalfugen. Diese reduzierten Trägheitsmomente sind bei der Verteilung der Horizontalkräfte anzusetzen. In [9] sind darüberhinaus Kriterien angegeben, bei deren Erfüllung der Nachweis der Horizontalkräfte von Großtafelbauten vernachlässigt werden kann.

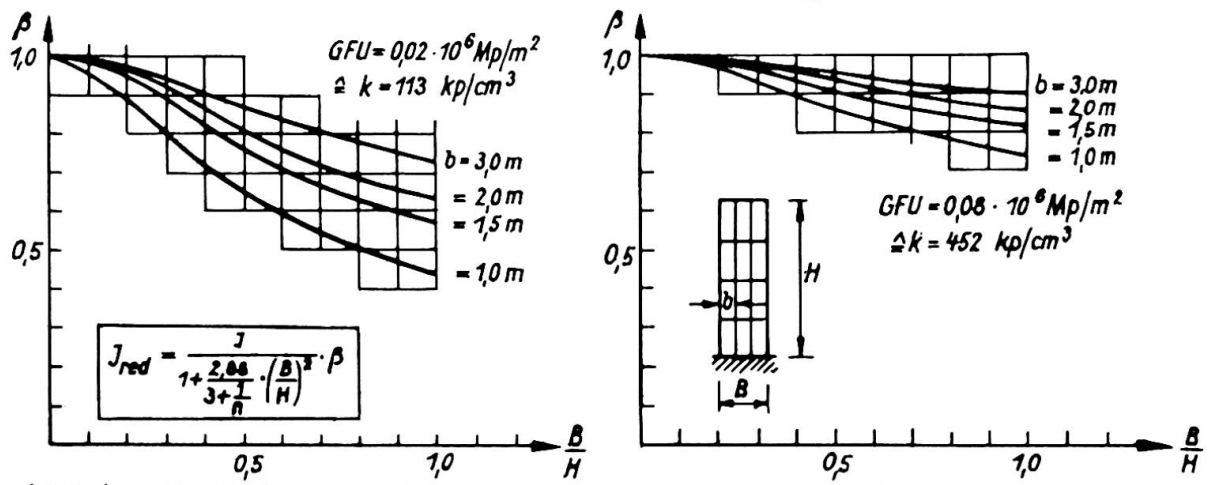

Bild 4: Abminderungsfaktor ß für das Trägheitsmoment der Wand

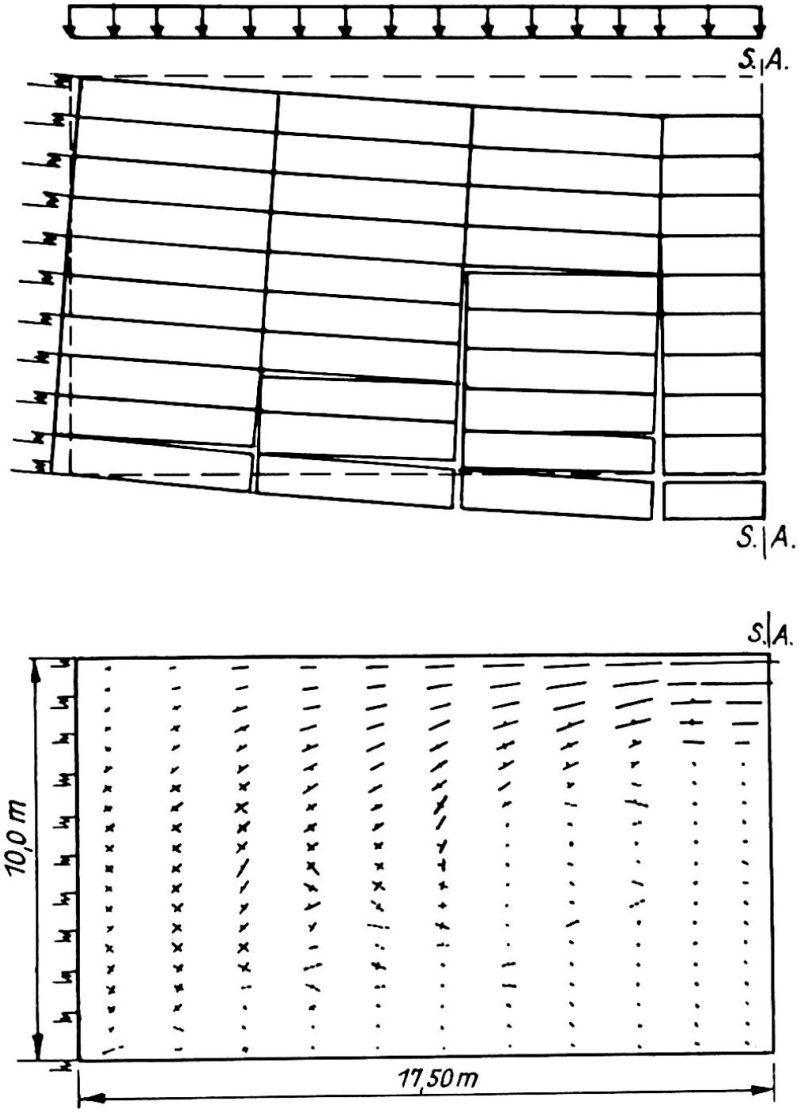

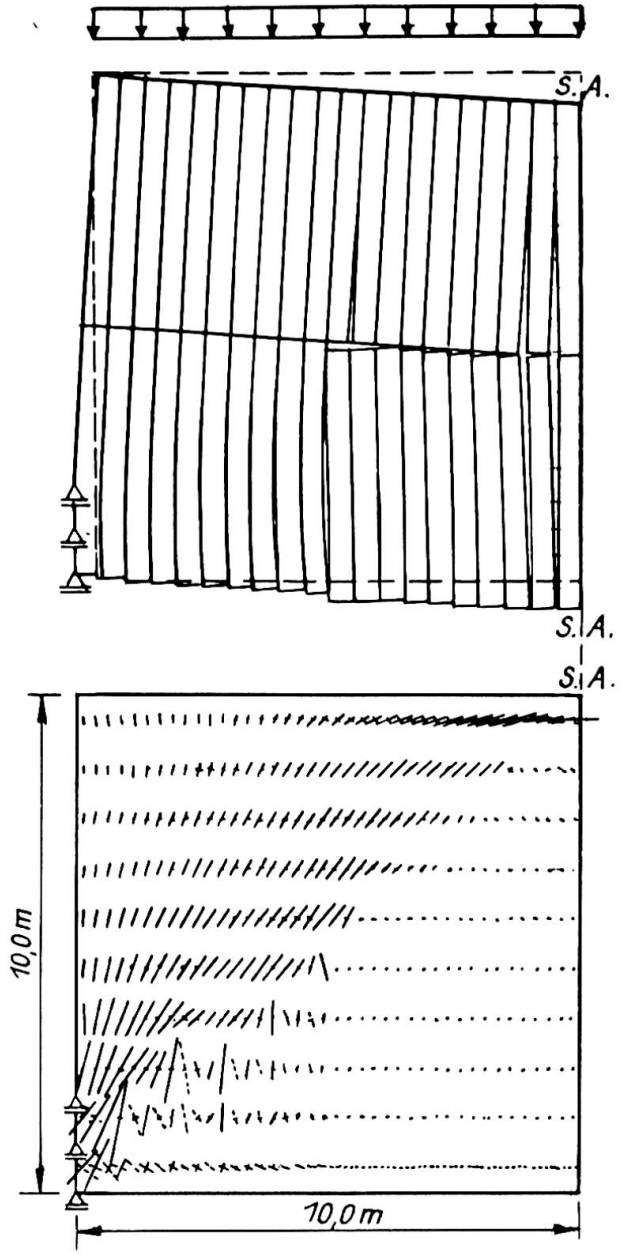

Bild 5: Verformungs- und Hauptspannungsbilder von Fertigteil-Deckenscheiben

4. Tragverhalten von Deckenscheiben aus Fertigteilen

Zum Studium des Tragverhaltens von Deckenscheiben wurden zahlreiche numerische Untersuchungen durchgeführt, in denen die rechnerische Bruchlast der Scheiben ermittelt wurde. Die Lasten wurden dabei stufenweise aufgebracht und iterativ die zugehörigen Steifigkeiten der Fugenfedern und des Verbundes zwischen Stahl und Beton bestimmt. Die wesentlichsten Parameter für das Tragverhalten sind: die Fugenausbildung (Fugenrandprofilierung → Schubtragfähigkeit), die Lagerungsbedingungen der Scheibe (eine konzentrierte Lagerung am unteren Rand der Scheibe ergibt günstigere Schubübertragung in Auflagernähe und eine größere Druckzone in Scheibenmitte, eine über die Scheibenhöhe verteilte Lagerung führt zu kleinerer Druckzone und kann zu ungünstigeren Verhältnissen bezüglich der Schubübertragung in Auflagernähe führen). Schließlich ist die Querkraftübertragung in Scheiben, bei denen die Plattenspannrichtung senkrecht zur Stützrichtung der Scheibe verläuft, ungünstiger als bei Plattenspannrichtung parallel zur Stützrichtung der Scheibe. Rechenergebnisse sowie ein Bemessungsvorschlag sind in [6] und [10] angegeben. Die aus der Rißbildung entstehende Spannungsumlagerung ist exemplarisch in Bild 5 dargestellt.

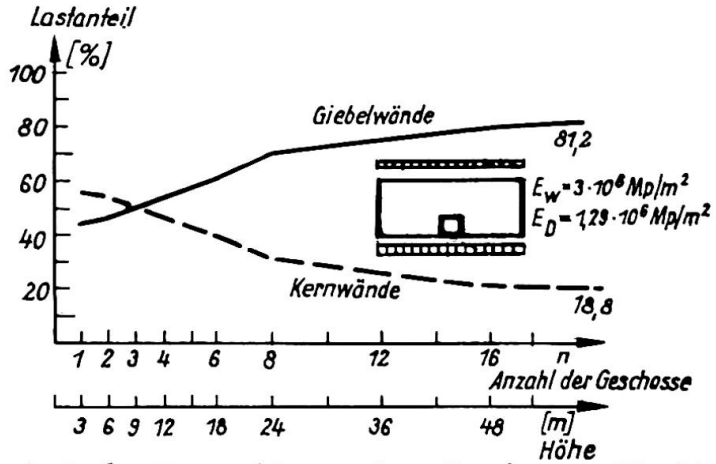

Bild 6: Verteilung der Horizontalkräfte bei Annahme von $E_D \neq \infty$

Die Steifigkeit der Deckenscheiben aus Fertigteilen ist geringer als die von Ortbetonscheiben. Wird von der Annahme starrer Deckenscheiben bei der Verteilung der Horizontalkräfte auf die aussteifenden Wände abgegangen, was bei Fertigteilscheiben oft zu berücksichtigen ist, so ergeben sich vor allem in den unteren Geschossen wesentliche Abweichungen gegenüber den Ergebnissen mit starren Scheiben.

LITERATURVERZEICHNIS

[1] Beck, H.; Mehlhorn, G.; Stauder, W.; Schwing, H.: Zusammenwirken von einzelnen Fertigteilen als großflächige Scheibe. Schriftenreihe Deutscher Ausschuß für Stahlbeton, Heft 224, Verlag Wilhelm Ernst & Sohn, Berlin, 1973.

[2] Schwing, H.: Zur wirklichkeitsnahen Berechnung von Wandscheiben aus Fertigteilen. Dissertation, Darmstadt, 1975.

[3] Schwing, H.; Mehlhorn, G.: Zum Tragverhalten von Wänden aus Fertigteiltafeln. Betonwerk und Fertigteil-Technik 1974, S.313.

[4] Franklin, H.A.: Nonlinear Analysis of Reinforced Concrete Frames and Panels, Report No SESM-7o-5 University of California, Berkeley 197o.

[5] Mehlhorn, G.; Schwing, H.: Zur Berechnung und Konstruktion von Wandscheiben aus Fertigteilen. Betonwerk und Fertigteil-Technik 1973, S.360.

[6] Mehlhorn, G.; Schwing, H.; Berg, K.-R.: Tragverhalten von aus Fertigteilen zusammengesetzten Scheiben. Nr.33 der Forschungsberichte aus dem Institut für Massivbau der Technischen Hochschule Darmstadt, 1976.

[7] Schwing, H.: Stress State in Horizontal Joints of Large Panel Shear Walls, Bearing Walls, CIB Working Commission W 23 A, Meeting in Darmstadt, 1974, S.341.

[8] Mehlhorn, G.; Schwing, H.: Behaviour of Panel Shear Walls. State of Art Reports. II.International Symposium on Bearing Walls, Warsaw 1975, S.25.

[9] Brandt, B.; Schwing, H.: Consideration of Horizontal Loads in the Design of Large Panel Buildings II. International Symposium on Bearing Walls, Warsaw 1975.

[10] Mehlhorn, G.; Schwing, H.; Klein, D.: Deckenscheiben aus Bimsbetonhohldielen. Erscheint in Beton- und Stahlbetonbau 1976.

ZUSAMMENFASSUNG

Auf der Grundlage numerischer Untersuchungen mit einem Programm nach der Methode der finiten Elemente, in dem das Trag- und Verformungsverhalten von Fugen realistisch erfasst werden kann, wird der Einfluss mehrerer Parameter auf das Trag- und Verformungsverhalten aus einzelnen Fertigteilen zusammengesetzter Scheiben aufgezeigt. Zur Bestimmung des Fugenverhaltens werden empirische Formeln angegeben.

SUMMARY

The influence of several parameters on the loadbearing and deformation behaviour of precast floor and wall diaphragms is shown by a finite-element-analysis taking into account the realistic loadbearing and deformation behaviour of the joints between the different precast elements. Empirical formulas are given for the determination of the joint behaviour.

RESUME

L'influence de plusieurs paramètres sur la résistance et la déformation des dalles et murs de contreventement composés d'éléments préfabriqués est donnée par un calcul et un programme sur ordinateur, basé sur la méthode des éléments finis, dans lequel le comportement des joints peut être pris en considération. Des formules empiriques pour la détermination du comportement des joints sont données.

Assemblages en béton armé sous charges répétées diverses

Stahlbetonfugen unter verschiedenen mehrfach wiederholten Belastungen

Reinforced Concrete Connections under Different Repeated Loadings

MICHEL KAVYRCHINE, Chef
ROBERT SOUBRET, Ingénieur
MARC ASTRUC, Ingénieur
Service d'Etude des Structures du C.E.B.T.P.
Saint-Rémy-lès-Chevreuse, France

1. Les assemblages étudiés sont réalisés par bétonnage entre deux éléments plats en béton armé, des armatures en attente dépassant dans l'assemblage.

Les études expérimentales présentées ont porté d'une part sur le cisaillement longitudinal d'assemblages crantés et armés, du type utilisé en construction entre deux panneaux préfabriqués, et d'autre part sur le cisaillement et la flexion simultanés d'assemblages armés mais non crantés. Dans les deux cas, il a été procédé à des répétitions de charges.

2. Une étude systématique du comportement au cisaillement d'assemblages crantés et armés a été faite, de 1966 à 1972, par M. Michel POMMERET. Elle a permis de déterminer le comportement de ce type d'assemblage, de montrer la possibilité d'un fonctionnement plastique avant épuisement de sa capacité de résistance, de donner par une formule empirique la valeur de cette résistance ultime. (Annales de l'I.T.B.T.P. de Mars 1974).

Plusieurs essais de cisaillement longitudinal ont été faits ensuite (POMMERET,ASTRUC) sous charges alternées successives, dans les conditions suivantes :

Les assemblages de 18 par 18 cm de dimension transversale et 200 cm de long, étaient d'un type connu, utilisé pour la fonction verticale de panneaux préfabriqués, ayant déjà fait l'objet d'essais statiques (figure 1). Chacun comportait deux bordures, crantées, d'où dépassaient des aciers en attente, en forme de boucles. L'assemblage était coulé une dizaine de jours, après les bordures, avec un béton de résistance inférieure à celle du béton des bordures.

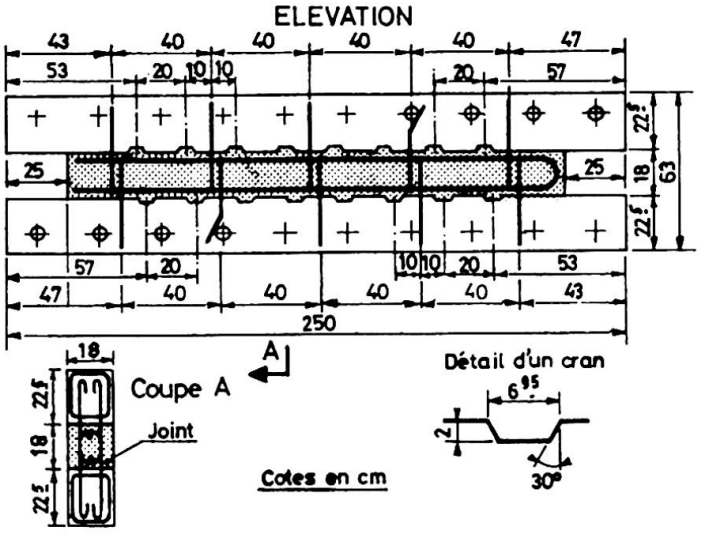

Fig. 1 - Modèle essayé

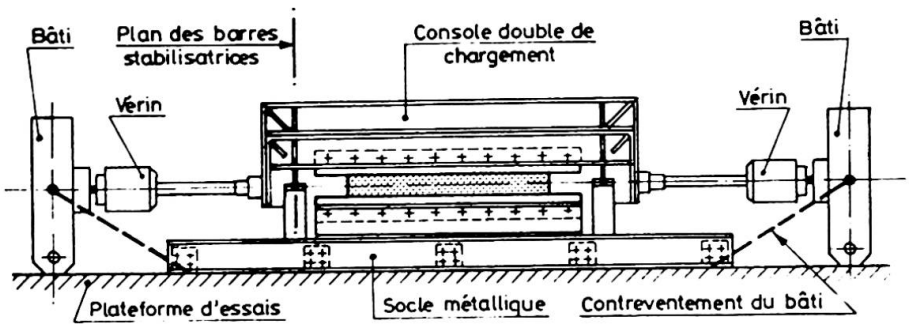

Fig. 2 - Montage d'essai

Chaque assemblage était soumis alternativement à des forces exercées suivant son axe dans une direction puis dans l'autre (figure 2). Un essai statique a été exécuté pour chaque série, à titre de référence sur un corps d'épreuve semblable et a donné une valeur de référence . Avant tout essai, chaque assemblage est fissuré aux plans de reprise par extension transversale par des vérins pour éviter un collage.

Les sollicitations alternées ont été exercées de deux manières différentes :

a - par déformation alternée répétée, avec une amplitude de Tu 0,1 mm, assez rapidement, la courbe force-déformation a présenté une boucle d'hystérésis très dissymétrique (figure 3) (force appliquée variant de 0,65 à 0,70 Tu dans un sens et pratiquement zéro de l'autre). Après 1000 cycles dans un cas et 20 000 dans l'autre, l'essai a ensuite été poussé à rupture et la résistance ultime obtenue est restée voisine de la résistance statique de référence Tu.

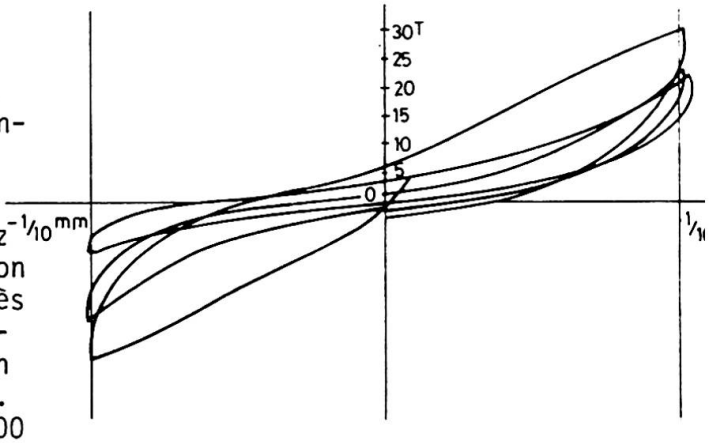

Fig.3- Cycles d'hystérésis à variation de déformation imposée

b -par forces alternées, égales et opposées, en appliquant au corps d'épreuve une force K Tu, et en notant le nombre N de cycles d'alternances que la pièce pouvait supporter avant rupture. La boucle d'hystérésis se déplace progressivement jusqu'à rupture. Les résultats ont été les suivants : pour des corps d'épreuve âgés de 32 à 45 jours (résistance du béton de l'assemblage d'environ 16 N/mm2) essayés en 1972, on a :

K=0,91 N=6 K=0,82 N=16 K=0,73 N=979

Pour des corps d'épreuve âgés de 635 à 670 jours, essayés en 1974, (résistance du béton de l'assemblage env. 27 N/mm^2), on a obtenu avec une rupture d'ailleurs brutale :

K=0,77 N=9 K=0,69 N=37 K=0,62 N=7100

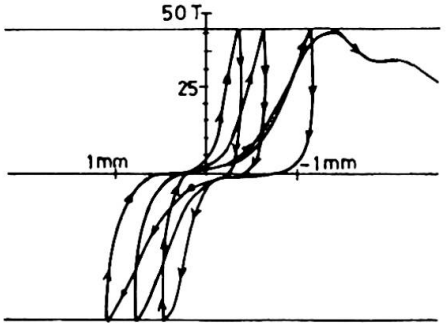

Fig. 4 - Cycles d'hystérésis à variation de charge imposée

L'augmentation de résistance du béton de 16 N/mm^2 à 27 N/mm2 (due au vieillissement et probablement aussi à une différence de qualité) aurait dû, d'après la formule expérimentale de POMMERET, faire passer la résistance statique par n de l'assemblage de 14800 daN à 18500 daN; en réalité, la résistance statique est passée de 22000 daN à 27350 daN, c'est-à-dire dans la proportion prévue, mais la résistance aux charges alternées n'a pratiquement pas augmenté puisque l'on trouve, par interpolation , pour 1000 alternances, 16000 daN de charge limite en 1972 et 17000 daN en 1974. A titre de repère, notons que la résistance à rupture de l'assemblage, calculée d'après la règle des coutures qui suppose des bielles de béton inclinées à 45° est de 4150 daN/ml, donc bien inférieure.

3. Dans une autre recherche (SOUBRET), nous nous sommes proposés d'examiner le comportement d'une série d'assemblages sollicités en flexion et soumis à un cisaillement longitudinal.

Nos 6 corps d'épreuve ont les dimensions transversales réelles d'un assemblage exécuté sur un pont à deux tabliers à caissons construits successivement.

Chaque modèle est constitué de deux panneaux en béton armé préfabriqués, qui comportent des aciers en attente droits, et de l'assemblage en béton armé qui est coulé horizontalement. (figure 3).

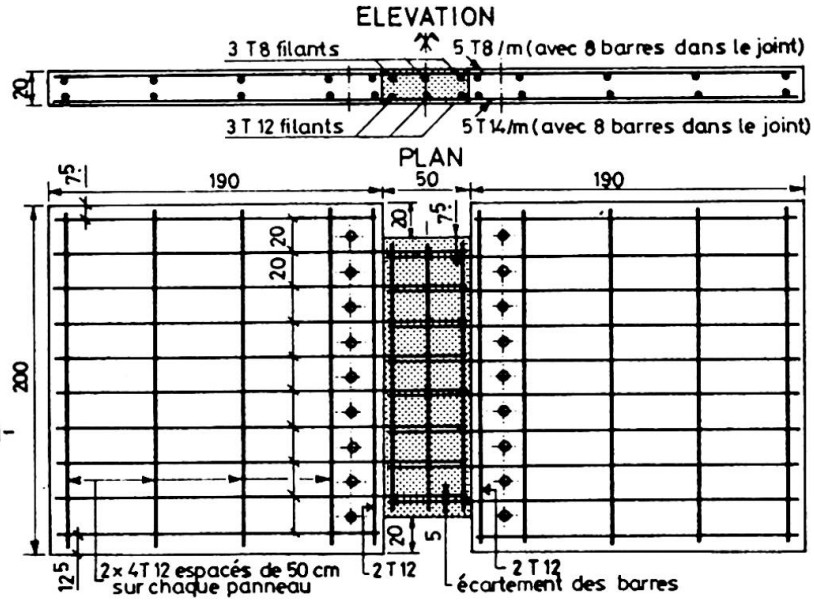

Fig. 5 - Corps d'épreuve soumis à flexion et cisaillement

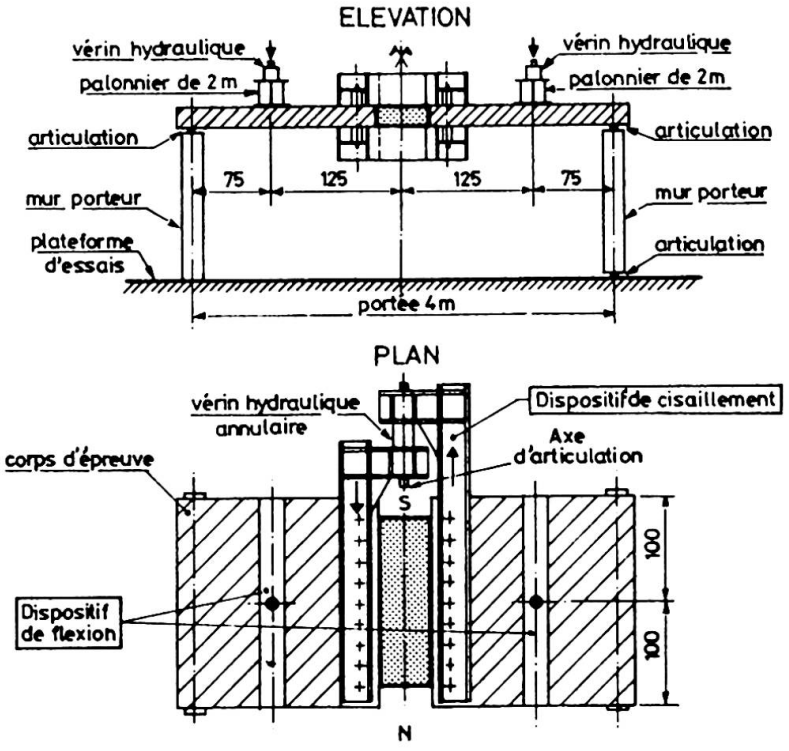

Fig. 6 - Montage d'essai

Les surfaces de reprise sont lisses et pour éviter tout "collage", un badigeon d'huile de décoffrage a été passé sur le bord de chaque panneau avant bétonnage.

Une série de tubes a été placée dsur chaque panneau près du joint pour assurer par boulonnage la mise en place du dispositif de cisaillement, et le montage d'essai a été réalisé conformément à la figure 6.

Repère des corps d'épreuve	Sollicitation de l'assemblage		But recherché
	En flexion (vérin P)	Au cisaillement(vérin T)	
FV 1	par paliers statiques jusqu'à rupture	pas de chargement	Détermination expérimentale du moment de rupture Mu
FV 2	pas de chargement par vérins poids propre uniquement	par paliers statiques jusqu'à rupture	Détermination expérimentale de la force de cisaillement ultime Tu et du cisaillement $\tau_u = \frac{Tu}{S}$
FV 3	application dynamique du moment Mu (contrainte calculée des aciers 280 N/mm^2)	applications successives des taux de cisaillement : $0,3\tau_u$ $0,6\tau_u$ $0,9\tau_u$	étude de l'influence du cisaillement sous charge de service
FV 4	application dynamique du moment Me (contrainte calculée des aciers 420 N/mm^2°	applications successives des taux de cisaillement : $0,3\tau_u$ $0,6\tau_u$ $0,9\tau_u$	étude de l'influence du cisaillement lorsque la limite d'élasticité de calcul est atteinte en traction dans les aciers
FV 5	application dynamique du moment : 0,9 Mu	applications successives des taux de cisaillement : $0,3\tau_u$ $0,6\tau_u$ $0,9\tau_u$	étude de l'influence du cisaillement au voisinage de la rupture par flexion
FV 6	application constante du Moment Ms	par paliers dynamiques jusqu'à rupture	détermination d'une contrainte de cisaillement admissible sous charge de flexion en service

Lorsque les modalités de chargement comportent des phases "dynamiques" les charges hydrauliques correspondantes sont appliquées 10 000 fois pour P et 1000 fois pour T entre la valeur du palier considéré et environ le tiers de celle-ci.

En flexion les assemblages se sont comportés comme des poutres en béton armé monolithes et le calcul donne une bonne approximation des charges de rupture sur la largeur du joint essayé.

La contrainte de cisaillement limite sous charge de service en flexion trouvée sur FV 6 (voir le tableau) est de 1,13 N/mm2.

La combinaison du cisaillement longitudinal et de la flexion n'a révélé un effet d'interaction qu'au voisinage des états ultimes, c'est-à-dire bien au-delà des états d'utilisation.

L'influence d'une répétition de charges, en flexion comme au cisaillement, se manifeste seulement pour des sollicitations proches de sollicitations ultimes.

L'ensemble de ce travail expérimental montre qu'un assemblage en béton armé à partir d'aciers droits laissés en attente, peut assurer une liaison efficace entre deux poutres principales, sous des efforts tangents combinés à une flexion.

En conclusion, l'exécution d'essais sur des modèles reproduisant les dimensions réelles d'assemblages a permis de mieux comprendre le comportement des assemblages entre éléments en béton armé et de proposer des méthodes de calcul.

RESUME

Des études expérimentales ont été menées sur le comportement d'assemblages en béton soumis au cisaillement. Dans une première étude, des assemblages crantés et armés du type employé pour la liaison verticale de panneaux préfabriqués ont été essayés sous efforts tangents alternés, à deux âges différents; la résistance aux efforts alternés est importante, mais augmente moins vite avec l'âge que la résistance statique. Dans une deuxième étude, des assemblages à faces planes, armés par des barres droites en attente, ont été essayés en flexion et cisaillement longitudinal combiné; l'effet de la répétition des charges n'apparait pas en service.

ZUSAMMENFASSUNG

Das Verhalten schubbeanspruchter Stahlbetonfugen wurde untersucht. Eine erste Untersuchung betrifft verzahnte und bewehrte Fugen, wie sie normalerweise bei der Verbindung von vorfabrizierten Wänden verwendet werden. Mehrfach wiederholte Schubbeanspruchung wurde auf zwei verschieden alte Prüfkörper aufgebracht. Der ermittelte Widerstand ist beträchtlich, steigt jedoch mit dem Alter weniger rasch an als der Widerstand gegenüber statischer Schubbeanspruchung. Der zweite Versuch wurde mit glatten Fugen und normalen geraden Anschlusseisen durchgeführt. Die Belastung bestand aus einer Kombination von Biegung und Längsschub. Der Einfluss einer wiederholten Belastung war im Gebrauchszustand nicht bemerkbar.

SUMMARY

Experimental studies have been made on the behaviour of reinforced concrete connections under shear. In a first study, reinforced and kewed connections of the type used for jointing vertically precast panels have been tested under alternating shear, at two different ages; the strength under alternating forces is important, but grows with age more slowly than static strength. In a second study, connections with plane interfaces, reinforced by straight bars have been tested under flexural and tangential longitudinal combined action; the effect of repetition of loading does not appear in service state.

VI b

Développements dans la production et l'assemblage

Entwicklungen in Herstellung und Montage

Developments in Manufacture and Assembly

Leere Seite
Blank page
Page vide

Beton hoher Grünstandfestigkeit für vorfabrizierte Bauteile

Concrete of High Strength in "Green" Condition for Precast Concrete Products

Béton à haute résistance au décoffrage immédiat pour éléments préfabriqués

BERNHARD DARTSCH
Dipl. Ing.
Verein Deutscher Ingenieure VDI
Düsseldorf, BRD

1. Einführung

Für die Herstellung von Betonfertigteilen werden oft frühhochfeste Betone bevorzugt, weil sie u.a. eine schnelle Wiederverwendung der Schalung zulassen. Nachteilig ist in diesen Fällen oft der zusätzliche wirtschaftliche Aufwand sowie auch ein erhöhtes betontechnisches Risiko in bezug auf Rißbildung, Ausblühungen usw. In vielen Fällen könnte statt eines frühhochfesten Betons ein Beton besonders hoher Grünstandfestigkeit die erwünschte wirtschaftliche Fertigung ermöglichen.

Mit Grünstandfestigkeit bezeichnet man die Festigkeit, die ein nach besonderen Regeln zusammengesetzter Beton unmittelbar nach dem Einbringen, Verdichten und Entformen aufweist /1/. Ein geeigneter Beton kann also nach dem Betonieren und Verdichten sogleich entschalt und die Schalung sofort wieder verwendet werden.

Weitere Vorteile dieses Verfahrens sind die in der Zusammensetzung des Betons begründete hohe Stapel-, Transport- und Einbaufestigkeit derartiger Bauteile nach bereits kurzer Zeit, ohne daß besondere Einrichtungen nötig würden.

Nachteilig steht einer breiten Verwendung dieser Technik entgegen, daß die mit den üblichen betontechnischen Mitteln erreichbare Grünstandfestigkeit recht klein ist und zudem empfindlich auf Streuungen in der Betonzusammensetzung reagiert. Die Anwendung beschränkt sich daher zur Zeit auf kleine oder besonders standfeste Fertigteile wie Steine oder Rohre.

2. Eigenschaften und Prüfverfahren

In Tabelle 1 sind Anhaltswerte zu den Eigenschaften von Beton hoher Grünstandfestigkeit zusammengestellt.

Der Begriff "Grünstandfestigkeit" wird in der Tabelle nicht genannt, sondern ist dort durch den Begriff "Druckfestigkeit" ersetzt, die im allgemeinen an frisch ausgeschalten Würfeln mit 20 cm Kantenlänge bestimmt wird, wobei seit der Wasserzugabe im Mischer im allgemeinen mindestens 20 Minuten vergangen sind. Die Übertragung der Druckfestigkeitsprüfung des Festbetons auf den "grünen" Beton ist nicht problemlos: Wichtig für den Formling ist weniger die Bruchfestigkeit als die Belastung, die noch ohne nennenswerte Verformung aufgenommen werden kann. Bei den Bemühungen um die Verbesserung der Grünstandfestigkeit darf dies nicht außer acht gelassen werden.

Tabelle 1 Anhaltswerte für die Eigenschaften von Beton hoher Grünstandfestigkeit (nach versch. Quellen)

		Betonalter						
		"grün"					1 d	28 d
		1 h	2 h	4 h	8 h	16 h	24 h	
Druckfestigkeit	N/mm^2	0,1 - 0,5	0,2 - 0,6	0,3 - 0,8	0,5 - 2,0	5 - 10	10 - 35	50 - 70
	%				0,05- 1,0	10 - 30	30 - 50	100
Zugfestigkeit	%				0,05- 1,0	10 - 30	30 - 50	100
E-Modul	1000 N/mm^2			<0,5	3 - 5	10 - 15	10 - 20	25 - 35
	%			bis 2	10 - 15	40 - 50	60 - 70	100
Bruchstauchung	‰	>20	>20	>15	~ 8	~ 3	~ 3	~ 2
Bruchdehnung	‰	> 2	0,5 - 1,0	0,1 - 0,6	0,1	> 2	> 2	> 2

3. Verbesserung der Grünstandfestigkeit durch Faserzugabe

Die Wirkung einer Zugabe von kurzgeschnittenen Fasern in die Mischung auf die Betoneigenschaften ist in zahlreichen Arbeiten untersucht worden, u.a. in /2/ bis /6/. Die Möglichkeiten, die sich in Hinblick auf die Verbesserung der Grünstandfestigkeit von Beton ergeben, wurden bisher aber kaum beachtet. Im Forschungsinstitut der Zementindustrie in Düsseldorf, Bundesrepublik Deutschland, wurden daher auf Anregung des Verfassers einige Versuche durchgeführt, in denen die Erhöhung der Grünstandfestigkeit von Beton durch Zugabe von handelsüblichen Kunststoff-, Glas- und Stahlfasern beobachtet werden konnte.x)

3.1. Wirkung einer Faserbewehrung im Beton

Im Gegensatz zu der üblichen Bewehrung im Stahlbetonbau sind bei einer Bewehrung aus kurzen Fasern, die dem Beton beim Mischen zugegeben wurden, die Bewehrungselemente weder in Kraftrichtung ausgerichtet noch in der Zugzone konzentriert. In Verbindung mit den kurzen Einbindelängen ergibt sich so ein "Wirkungsgrad", der etwa bei 1/10 dessen einer üblichen Stabstahlbewehrung liegt. Die möglichen Verbesserungen der Eigenschaften des erhärteten Betons sind daher - und die zahlreichen veröffentlichten Versuche (/2/ bis /5/) haben das auch bestätigt - sehr gering.

---

x) Der Verfasser dankt seinem damaligen Direktor, dem Leiter dieses Instituts, Herrn Prof. Dr. Ing. G. Wischers, für die Unterstützung und das Interesse an dieser Frage und für die freundliche Genehmigung, Einzelheiten aus diesem Versuchsprogramm hier zu veröffentlichen.

Im frischen Beton liegen andere Verhältnisse vor. Ein wichtiges Kriterium für die Wirksamkeit einer Bewehrung ist das Verhältnis der Elastizitätsmoduln von Bewehrung und Matrix. Beim "grünen" und auch beim jungen Beton ist dieses Verhältnis günstiger als im Festbeton. Im "grünen" Beton wirken selbst relativ weiche Fasern aus Kunststoff als steife Einschlüsse und werden entsprechend zum Tragen herangezogen.

Die Haftung der Fasern in der Matrix ist eine weitere wichtige Einflußgröße für die Wirkung einer Faserbewehrung. Fasern mit großer Oberfläche und wassersaugende Fasern sind in dieser Beziehung günstiger, Stahlfasern ungünstig. Diese bieten aber Vorteile durch ihre Eigensteifigkeit und insbesondere durch ihr günstiges Tragverhalten im erhärteten Beton.

3.2. Einige Angaben zur Herstellung und Prüfung

Ausgangsstoffe: Als Ausgangsstoffe kommen die üblichen Ausgangsstoffe für Beton hoher Grünstandfestigkeit infrage. Es können alle handelsüblichen Fasern eingesetzt werden, d.h. insbesondere Kunststoff-, Glas- und Stahlfasern. Bei Tastversuchen wurden rd. 30 mm lange Fasern verwendet.

Mischungsverhältnis: Das Mischungsverhältnis entspricht weitgehend dem eines üblichen Betons hoher Grünstandfestigkeit. Bei den Versuchen wurde ein Zementgehalt von rd. 350 kg/m³ und ein Zuschlaggemisch mit einer Kornzusammensetzung in der Mitte zwischen den Sieblinien A 16 und B 16 gewählt. Bei Zugabe von Stahlfasern brauchte das Mischungsverhältnis des Ausgangsbetons nicht geändert zu werden: Kunststoff- und vor allem Glasfasern haben jedoch eine große Oberfläche und erfordern daher die Zugabe von Zementleim, wenn eine vergleichbare Verarbeitbarkeit der Mischung und gleiche Festigkeiten des erhärteten Betons sichergestellt werden sollen. Die Faserzugabe zur Erhöhung der Grünstandfestigkeit kann sehr gering sein, oft unter 1 Vol.-%.

Herstellen: Die Fasern wurden von Hand gleichmäßig innerhalb 1 Minute in den laufenden Mischer gegeben. - Die Stahlfasern kamen nach Zugabe aller Mischungsbestandteile in den Mischer. Bei Einsatz von Kunststoff- und Glasfasern wurden erst Zement, Wasser und die mittleren Kornfraktionen vorgemischt, dann die Fasern und anschließend die restlichen Kornfraktionen zugegeben.

Verdichten: Faserbewehrter Beton verhält sich auch bei einer geringen Faserzugabe etwas anders als Beton ohne Faserzugabe, dies ist auf das große Auflockerungsvermögen des Betons infolge der Fasern zurückzuführen. Bei den Versuchen war der Verdichtungswiderstand und damit die erforderliche Verdichtungsenergie der Faserbetonmischungen aber praktisch nicht höher als bei den Nullmischungen. Die Beurteilung des Verdichtungswiderstandes erfolgte dabei nach dem in /7/ beschriebenen modifizierten Verdichtungsversuch, der sich eng an den Verdichtungsversuch nach DIN 1048 anlehnt.

Prüfen: Das Prüfen der Festigkeit an grünem Beton kann wegen der geringen Festigkeiten nicht streng nach DIN 1048 bzw. einem anderen genormten Verfahren zur Bestimmung der Druckfestigkeit des Festbetons erfolgen. Bei den Tastversuchen erwies sich folgende Verfahrensweise als praktikabel:

Die Probekörper wurden wie folgt in die Prüfpresse eingebaut: Der Boden der Form wurde entfernt, dann der Prüfkörper in die Prüfpresse gestellt und dort die Seitenwände eingeschalt. Dieses

Verfahren ist auch bei Würfeln mit 30 cm Kantenlänge und bei Zylindern 15/30 durchführbar.

Die Probekörper wurden mit einer Belastungsgeschwindigkeit von etwa 0,1 kp/cm²sec geprüft, so daß nach rd. 30 sec der Bruch eintrat. Diese Prüfung fand im allgemeinen rd. 30 min nach der Wasserzugabe in den Mischer statt.

Im Bild 1 sind die gemessenen Festigkeiten von faserbewehrtem Beton in Relation zum Nullbeton hoher Grünstandfestigkeit dargestellt.

Tastversuche mit Dauerbelastungen von rd. 50% der jeweiligen Bruchlast zeigten, daß die erhöhten Gründruckfestigkeiten auch weitgehend ausgenutzt werden können: Die Verformungen waren optisch nicht wahrnehmbar und kamen nach rd. 10 min praktisch zum Stillstand.

Die Verbesserungen der Eigenschaften des grünen Betons durch eine Faserzugabe beschränken sich nicht nur auf die Festigkeit. Das Bruchverhalten wird ebenfalls verbessert. Ein Beton ohne Faserzugabe zerfällt nach dem Bruch, ein Beton mit Faserzugabe behält trotz erheblicher Stauchung einen gewissen Zusammenhalt.

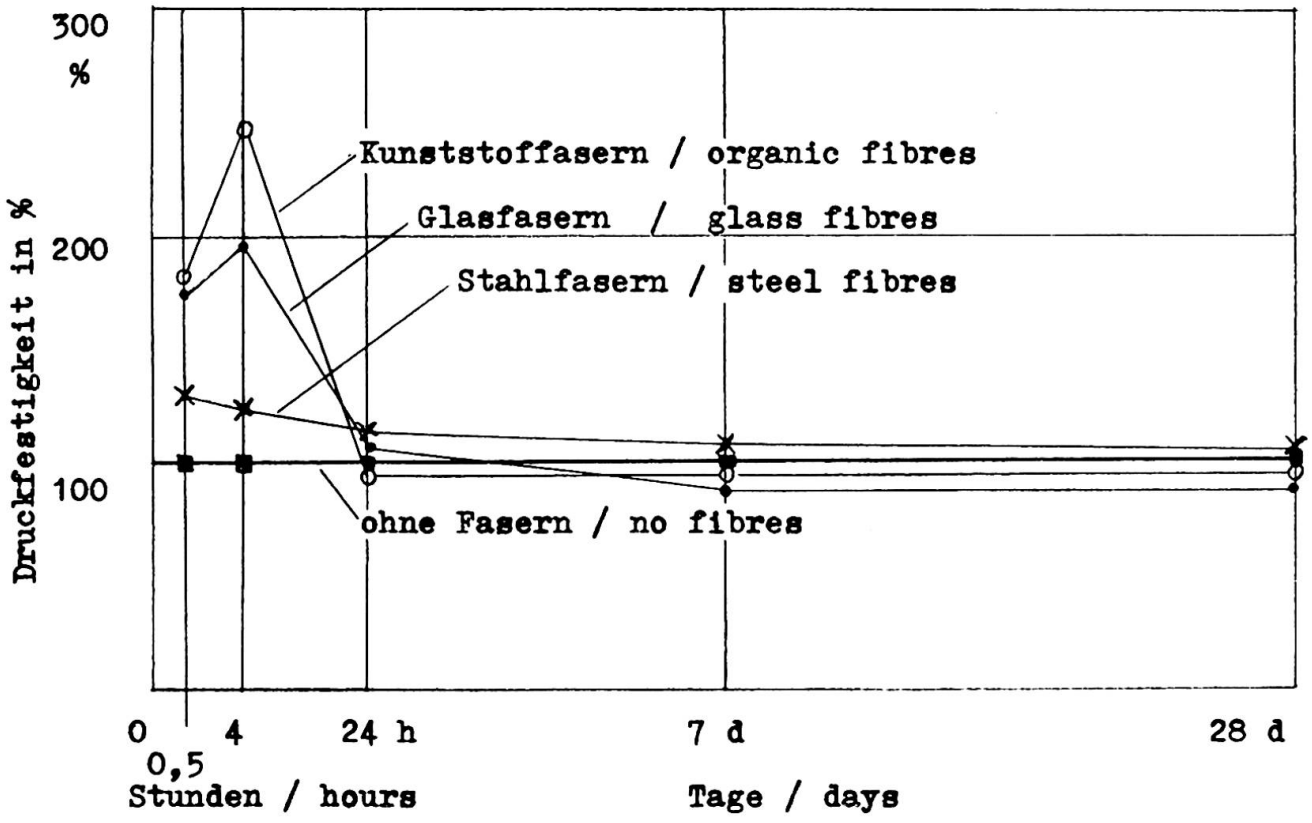

Bild 1: Erhöhung der Druckfestigkeit in jungem Alter von Beton hoher Grünstandfestigkeit durch Zugabe von 0,6 Vol-%Fasern. (Beton ohne Fasern: 100%)

Improving of the compressive strength in young age of concrete with high strength in "green" (freshly compacted) condition by addition of fibres (concrete without fibres: 100%)

Langzeitverhalten: Der Faserbewehrung wird im hier behandelten Anwendungsfall nur eine Aufgabe innerhalb der ersten Stunden nach der Herstellung zugewiesen. Tastversuche zum Langzeitverhalten zeigten, daß die Reaktion zwischen dem - sehr geringen - Anteil von Glasfasern und dem Beton zu keinen Schädigungen des Betons in höherem Alter führen, aber daß bei Stahlfaserbeton, der im Freien lagert, Rostflecken an der ungeschützten Oberfläche des Betons auftreten. Bei Einsatz von Kunststoffasern sind keine Auswirkungen auf das Langzeitverhalten zu erwarten, so daß allgemein gesagt werden kann, daß die gewählten niedrigen Faserzugaben, gleich welcher Art, keine nennenswerten nachteiligen Wirkungen auf die Tragfähigkeit des Betons erwarten lassen.

Zusammenstellung der Ergebnisse: Tabelle 2:

Unbewehrter und faserbewehrter Beton hoher Grünstandfestigkeit im Vergleich

Eigenschaft	Besonderheit des faserbewehrten Betons
Zusammensetzung	i.a.gleich; größere Variationsbreite; dichtes Gefüge eher erreichbar Faserzugabe bis etwa 1 Vol-%. praktisch alle Faserarten geeignet
Mischen	längere Mischzeit; aufwendigere Mischtechnik durch stufenweises Zugeben der Bestandteile. Geringerer Füllungsgrad des Mischers
Verdichten	aufwendiger; i.a. genügt eine etwas längere Rütteldauer
Stapeln und Transportieren	günstigeres Bruchverhalten günstigere Festigkeiten
Festigkeiten	Gründruckfestigkeit bis 250 % höher End-Druckfestigkeit praktisch gleich
Langzeitverhalten	i.a. keine negativen Wirkungen der Fasern
Gesundheitsschutz	Verletzungsgefahr bei Stahlfasern; Vorsicht bei Asbestfasern
Wirtschaftlichkeit	geringe Kostenerhöhung bei deutlich verbesserter Gründruckfestigkeit

4. Ausblick

Hohe Grünstandfestigkeiten werden beim Spritzbeton und der Fertigteilproduktion, beispielsweise der Rohrherstellung, verlangt. Eine besonders hohe Grünstandfestigkeit erlaubt die aufrechte Herstellung von schlanken - bewehrten oder unbewehrten - Fertigteilen, insbesonders dann, wenn diese einen komplizierten Querschnitt aufweisen und damit eine teure Schalung benötigen. Hier kann die Erhöhung der Grünstandfestigkeit durch Zugabe von geringen Mengen handelsüblicher Fasern in die Betonmischung zu wesentlichen technischen und wirtschaftlichen Vorteilen führen.

5. Literatur

/1/ Wierig, H.-J.: Eigenschaften von "grünem, jungem" Beton beton 18 (1968) H.3. S. 94/101

/2/ ACI-committee 544 : State-of-the-art-report on fiber reinforced concrete. ACI-Journal, Proc. V. 70 (1973) H. 11 , S. 729/744

/3/ Fibre reinforced concrete. ACI SP 44. Detroit 1974

/4/ Fibre-reinforced cement composites. Report produced by the materials technology division. Concrete society. Techn. Report No 51.067, London 1973

/5/ Wischers, G.: Faserbewehrter Beton. beton 24 (1974) H. 3,S. 95/99 und H. 4,S. 137/141

/6/ Romualdi, J.P., und G.B. Batson: Mechanics of crack arrest in concrete. Proc. ASCE 89 (1963), S. 147/168

/7/ Dartsch, B.: Zur Bestimmung von Verformungseigenschaften des Frischbetons. Determination of deformation properties of fresh concrete systems. La détermination des propriétés de déformation du béton frais. Materialprüfung - materials testing - materiaux, essais et recherches 17 (1975) H. 12, S. 434/439

ZUSAMMENFASSUNG

Fertigteile aus Beton hoher Grünstandfestigkeit können sofort nach dem Betonieren ausgeschalt werden. Versuche haben gezeigt, dass die Grünstandfestigkeit des Betons durch eine geringfügige Zugabe von kurzen handelsüblichen Fasern wesentlich verbessert, z.B. verdoppelt, wird. Nachteile für den erhärteten Beton sind bei richtiger Anwendung nicht zu befürchten, so dass dieser wirtschaftlichen Technik neue Anwendungsgebiete erschlossen werden.

SUMMARY

The formwork can be removed and re-used just after placing and compacting of the concrete, if this concrete is of high strength in "green" (freshly compacted) condition. Tests have shown, that a small addition of short fibers into the concrete mix will raise, e.g. double, the "green" strength without creating disadvantages in the hardened concrete. So the field of application of this economical technique can be extended.

RESUME

Les éléments préfabriqués en béton à haute résistance au coffrage immédiat peuvent être décoffrés immédiatement après le bétonnage. Des essais ont montré que par une faible addition de fibres courtes dans le mélange, la résistance d'un tel béton dans le stade frais compacté est considérablement améliorée, par ex. doublée. Lors d'un emploi correct il n'y a pas à craindre d'inconvénients pour le béton durci, de sorte que de nouveaux domaines d'utilisation s'ouvrent à cette technique économique.

Portlandzementklinker als Zuschlagstoff für hochfesten Beton

Portland Cement Clinker as Aggregate for High-strength Concrete

Clinker de ciment Portland comme granulat pour béton à haute résistance

THOMAS DRATVA
Ingenieur

JURAJ GEBAUER
Dr.

"Holderbank" Management und Beratung AG
Holderbank, Schweiz

1. Einleitung

Die neusten Entwicklungen und Tendenzen des Spannbetons deuten darauf hin, dass in absehbarer Zeit mit einer Reihe von wirtschaftlich interessanten Anwendungsmöglichkeiten für Konstruktions-Betone mit Festigkeiten von 85 - 120 N/mm^2 zu rechnen ist (1) - (3). Da aber die heutige Betontechnologie kaum Betone mit Festigkeiten über 70 N/mm^2 herzustellen erlaubt (4), wird die Entwicklung eines neuen Betontyps - eines hochfesten Betons - unerlässlich.

Die Technologie und Herstellung hochfester Betone befinden sich - mit einigen Ausnahmen (5) - im Stadium der Laborentwicklung. Im Prinzip werden folgende Massnahmen zur Herstellung hochfester Betone als die wichtigsten angesehen:

- Erhöhung der Verbundfestigkeit zwischen Zementpaste und Zuschlagkorn;
- erhöhte, vollständigere Verdichtung;
- Konstruktionsmassnahmen, wie z. B. 3-axialer Spannungszustand;
- Imprägnierung des erhärteten Betons mit Monomeren und deren Polymerisation.

Die Verbundfestigkeit zwischen der Zementpaste und dem Zuschlagkorn wurde anhand von Untersuchungen (6) (7) als eine im wesentlichen physikalische Bindung angesehen. Eine Erhöhung dieser Haftfestigkeit durch chemische Bindung würde zweifelsohne zu einer markanten Erhöhung der Betonfestigkeiten führen. Als Beweis kann man die Festigkeiten um 120 N/mm^2 anführen, welche Rimmer bei Verwendung von Tonerdezement mit Zuschlagstoffen aus Tonerdezement-Klinker erzielt hat (5). Der breiteren Anwendung dieses hochfesten Betontyps stand das Problem der Zersetzung der Kalziumaluminathydrate im Wege.

Es ist anzunehmen, dass bei der Verwendung von reinen Portlandzement-Klinkern als Zuschlagstoffe die Verbundfestigkeit zwischen der Paste und dem

Portlandklinkerkorn durch die mögliche chemische Bindung bei der Hydratation von beiden Komponenten wesentlich erhöht wird (8). Die Erhöhung der Betonfestigkeiten kann weiter die hohe Eigenfestigkeit des Portlandklinkers (9) günstig beeinflussen.

Der Gegenstand der beschriebenen Untersuchungen war die Abklärung der wichtigsten Betoneigenschaften des Portlandzementklinker-Betons.

2. Materialien

Für die Vergleichsbetone aus natürlichem Zuschlag wurde gebrochener glacialer Kiessand aus dem Schweizer Mittelland (Reuss) als Gemisch von 8 Fraktionen mit 30 mm Grösstkorn verwendet. Als Klinkerzuschlag wurde bei allen Betonmischungen der Portlandklinker aus der laufenden Fabrikproduktion verwendet. Der Klinker wurde nach Entfernung der 30 mm überschreitenden Körner durch Siebung auf gleiche Kornfraktionen wie der natürliche Zuschlag geteilt. Ein Teil des Klinkers 0 - 30 mm wurde für eine Versuchsserie mit gebrochenem Klinker (Serie C) in einem Labor-Backenbrecher zerkleinert und dann wiederum durch Siebung fraktioniert. Die Sieblinie der Betonmischungen entsprach der Ideal-Linie nach Fuller.

Die chemische Zusammensetzung des Portlandklinkers geht aus Tabelle 1 hervor:

Tabelle 1. Chemische Zusammensetzung des Portlandklinkers

Fraktion	CaO	SiO_2	Al_2O_3	Fe_2O_3	SO_3	MgO	K_2O + Na_2O	CaO frei
0,5 - 1 mm	63,8	20,3	6,7	3,1	1,7	2,2	1,5	2,1
8 - 12 mm	64,8	21,2	5,9	2,8	1,3	2,3	1,2	1,2

Fraktion	C_3S	C_2S	C_3A	C_4AF	Dichte g/cm^3
0,5 - 1 mm	47,9	20,1	12,5	9,4	3,13
8 - 12 mm	56,3	16,1	10,9	8,5	3,15

Um die Verarbeitbarkeit der Betonmischungen zu verbessern, wurde einigen Betonmischungen ein Verflüssiger (Melment L 10) zugegeben.

Für die Mörtelmischungen wurde ISO-Normensand aus Beckum (BRD) und ASTM-Quarzsand (Ottawa) verwendet.

3. Betonzusammensetzung und Versuchsbedingungen

Die Zusammensetzung der Betone und Mörtel ist aus der Tabelle 2 ersichtlich.

Tabelle 2. Zusammensetzung der Mischungen

Prüfserie	Mischung Nr.	Typ der Zuschlagstoffe	W/Z-Faktor	Gewichtsverhältnis Zement/Zuschlag	Max. Korn (mm)
A	1	natürlich	1,0	1 : 7	5
	2	natürlich + P-Klinker 0,15 - 0,50 mm	1,0	1 : 7	5
B	3	natürlich	0,34	1 : 3,6	30
	4	P-Klinker	0,40	1 : 3,8	30
	5	P-Klinker	0,42	1 : 3,7	16
	6	P-Klinker	0,43	1 : 3,7	8
C	7	P-Klinker gebrochen	0,41	1 : 3,7	16
	8	P-Klinker gebrochen	0,43	1 : 3,7	8

Serie A: Mit der Serie A wurde an Zementmörteln der Beitrag des feinen Portlandklinkers zur Hydratation und Festigkeitsentwicklung untersucht. Ausgehend von der Mörtelzusammensetzung nach ISO wurde eine Hälfte des Zementes bei der Mischung 1 durch Quarzsand 0,2 - 0,6 mm, bei der Mischung 2 durch Portlandklinker Fraktion 0,15 - 0,50 mm ersetzt.

Serie B: Die Betonmischungen der Serie B wurden auf der Basis gleicher Konsistenz bei gleichem Zementgehalt hergestellt. Unterschiede im Wasseranspruch der Zuschlagstoffe sind daher in den Resultaten automatisch berücksichtigt. Als Variable wurde das maximale Korn gewählt. Der Portlandklinker wurde bei dieser Serie nur ausgesiebt.

Serie C: Diese Serie besteht aus Betonen aus gebrochenem Portlandklinker. Alle anderen Bedingungen gleichen jenen der Serie B, so dass auch hier die Mischung 3 als Kontrollmischung dient.

Versuchsdurchführung: Die Mischungen wurden auf folgende Eigenschaften geprüft: Konsistenz, Druck- und Biegezugfestigkeit, E-Modul, Schwinden und Quellen (im Wasser), Kriechmass, Frost-Tau-Widerstand und Sulfatbeständigkeit. Als Prüfkörper wurden meistens Betonprismen nach Schweiz. Betonnorm SIA 162 und Mörtelprismen gemäss ISO-Vorschrift verwendet.

4. Resultate und Diskussion

Der Portlandklinker wurde mit den üblichen Methoden auf seine Eignung als Betonzuschlag geprüft. Die Oberflächenbeschaffenheit der Klinkerkörner ist im allgemeinen rauh; die meisten Körner weisen eine runde oder gedrungene Kornform auf. Die Korngrössenverteilung des Klinkers aus einem bestimmten Drehofen ist verhältnismässig konstant; Unterschiede zeigen sich beim Vergleich der Korngrössenverteilung von Klinkern aus verschiedenen Oefen. Die aus dem Ofen anfallende Korngrössenverteilung ist zur direkten Betonherstellung meistens nicht geeignet; um zu entsprechenden Sieblinien zu gelangen, ist der Klinker durch Sieben zu klassieren. Um Klinkerkörner mit schwacher Eigenfestigkeit zu eliminieren, kann der Klinker mit gewöhnlichen Brechmaschinen der Zuschlagstoffindustrie gebrochen werden. Da der klassierte und eventuell gebrochene Klinker trocken ist, kann man den W/Z-Faktor mit grosser Genauigkeit bestimmen. In der Tabelle 3 sind die wichtigsten Eigenschaften des für die Versuche verwendeten PC-Klinkers enthalten.

Tabelle 3. Eigenschaften des Portlandklinkers

	Dichte g/cm^3	Raumgewicht kg/m^3	Wasseraufnahme nach 24 Std. %
natürliche Zuschlagstoffe	2,65	1,96	0,34
Portland-Klinker	3,14	2,87	2,3 - 6,1

In Untersuchungen an Mörtel (Serie A) wurde der Einfluss der feinen Fraktion (0,15 - 0,50 mm) von Portland-Klinker auf die Hydratation geprüft. Die Resultate sind übersichtlich in Fig. 1 zusammengestellt. Die Beteiligung des Klinkers am Hydratationsprozess kommt in diesem mageren Mörtel gut zum Vorschein. Die Druckfestigkeit des Mörtels mit Klinker ist gegenüber dem Mörtel mit Quarz-Sand nach 28, resp. 90 Tagen um 52%, resp. 67% höher. Der Hydratationsgrad, ausgedrückt in Prozenten des gebundenen Wassers zeigt um 30 - 50 % höhere Werte beim Mörtel mit Klinker. Durch dieses Experiment wurde die Annahme, dass beim Portlandklinker-Beton mit einer erhöhten Verbundfestigkeit auf chemischer Basis zu rechnen ist, bestätigt.

Mit den Serien B und C wurde hauptsächlich die Festigkeitsentwicklung, der Einfluss des Grösst-Korns und des gebrochenen Portland-Klinkers auf Betoneigenschaften untersucht. Dabei wurden bei den verschiedenen Betonmischungen mit Portland-Klinker als Zuschlag nach 28 Tagen Festigkeiten zwischen 75 - 87 N/mm^2, nach 90 Tagen 80 - 97 N/mm^2 erzielt. Die Kontrollbetone erreichten nur 50 - 70 % der Klinkerbeton-Festigkeiten. Einige Resultate sind in Fig. 2 enthalten. Zur Uebersicht sind die Relationen zwischen den Festigkeiten der einzelnen Mischungen in der Tabelle 4 zusammengestellt.

Tabelle 4. Vergleich der Festigkeiten von Betonen aus Portland-Klinker und natürlichen Zuschlagstoffen

(28 Tg. Festigkeiten des Kontroll-Betons (Misch. 3) = 100 %)

Misch. Nr.	Typ des Zuschlags	Max. Korn (mm)	Druckfestigkeit		Biegezugfestigkeit	
			1 Tg.	28 Tg.	1 Tg.	28 Tg.
3	natürlich	16	49	100	54	100
4	PC-Klinker	30	79	121	76	133
5	PC-Klinker	16	93	143	87	152
6	PC-Klinker	8	102	161	93	170
7	PC-Klinker gebrochen	16	103	157	90	168

Die Festigkeiten der Klinkerbetone steigen mit kleinerem Grösst-Korn. Durch Brechen des Klinkers wurden die Festigkeiten um weitere ca. 15% erhöht. Die Druckfestigkeiten des Klinkerbetons erreichten bereits nach 1 Tag die 28-tägige Druckfestigkeit des Kontrollbetons.

Der E-Modul des Klinkerbetons (Fig. 3) ist bei Belastungen zwischen 30 - 75 % der Bruchlasten um ca. 15% höher als derjenige des Kontrollbetons. Das Schwindmass, resp. Quellen des Klinkerbetons ist kleiner als beim Kontrollbeton (Fig. 4). Die Werte des Kriechmasses (Fig. 5) erlauben es vorerst nicht, Schlüsse zu ziehen, da die Belastungsdauer erst 21 Tage beträgt. Auch hier ist aber die Tendenz zu kleineren Längeänderungen beim Klinkerbeton erkennbar.

Sowohl bei der Prüfung des Frost-Tau-Widerstandes nach 30 Wechselzyklen als auch bei der Sulfatbeständigkeitsprüfung nach 1-monatiger Lagerung in 10%iger $NaSO_4$ Lösung wurde keine Verschlechterung der Klinkerbetonqualität festgestellt.

5. Schlussfolgerungen

Der Beitrag berichtet über erste Resultate von Versuchen mit hochfestem Beton aus Portlandzement-Klinker als Zuschlagstoff. Aufgrund der bisher vorliegenden Resultate konnte folgendes festgestellt werden:

- Die Herstellung des Portlandklinker-Betons ist mit keinen besonderen Schwierigkeiten verbunden und kann in den üblichen Betonmischanlagen vorgenommen werden.
- Portland-Klinker lässt sich durch Sieben gut klassieren. Mit gewöhnlichen Brechern der Zuschlagstoffindustrie kann man den Klinker problemlos brechen.

- Im Portlandklinker-Beton nimmt ein Teil des Klinkers am Hydratationsprozess teil. Durch die chemische Bindung wird die Verbundfestigkeit zwischen Matrix und dem Zuschlagkorn wesentlich erhöht, was wiederum zur Erhöhung der Festigkeiten beiträgt.
- Die bis jetzt gemessenen Druckfestigkeiten des Klinkerbetons lagen um etwa 20 - 60 % höher gegenüber den Vergleichsbetonen, hergestellt aus besten herkömmlichen Materialien mit einem sehr tiefen W/Z-Faktor. Die Biegezugfestigkeiten der Klinkerbetone lagen gegenüber den Vergleichsbetonen noch günstiger.
- Schwind- und Kriechmass der Portlandklinker-Betone ist gegenüber dem Kontrollbeton kleiner.
- Die bisherigen Resultate der Dauerhaftigkeit haben keine Verschlechterung der Eigenschaften von Klinkerbeton gegenüber dem Kontrollbeton gezeigt.

Literaturverzeichnis

(1) FIP: Methods of Achieving High-strength Concrete. Report of the FIP Commission, Fifth Congress of the FIP, Paris 1966

(2) FIP: Very High-strength Concrete. Report of the FIP Commission, Sixth Congress of the FIP, Prague 1970

(3) Swamy, R.N., Ibrahim, A.B., Anaud, K.L.: The Strength and Deformation Characteristics of High Early Strength Structural Concrete. Materials and Structures, RILEM, 1975, No. 48

(4) Mather, B.: Stronger Concrete. Symp. Concrete Strength, Highway Research Record, No. 210, 1967

(5) Rimmer, B.: High-grade Concrete. Industrialized Building Systems + Components, March 1967

(6) Hsu, T.T.C., Slate, F.O.: Tensile Bond Strength between Aggregate and Cement Paste or Mortar. Journal of ACI, April 1963

(7) Alexander, K.M., Wardlaw, J., Gilbert, D.J.: Aggregate - Cement Bond, Cement Paste Strength and the Strength of Concrete. Proceedings Int. Conference on the Structure of Concrete, London 1965

(8) Berger, B.L.: Properties of Concrete with Cement Clinker Aggregate. Cement and Concrete Research, Vol. 4, 1974, pp. 99 - 112

(9) Roy, D.M., Gonda, G.R.: High Strength Generation in Cement Pastes. Cement and Concrete Research, Vol. 3, 1973, pp. 807 - 820

Fig. 1 Vergleichsuntersuchungen an Mörtel mit PC-Klinker-Sand und Quarzsand

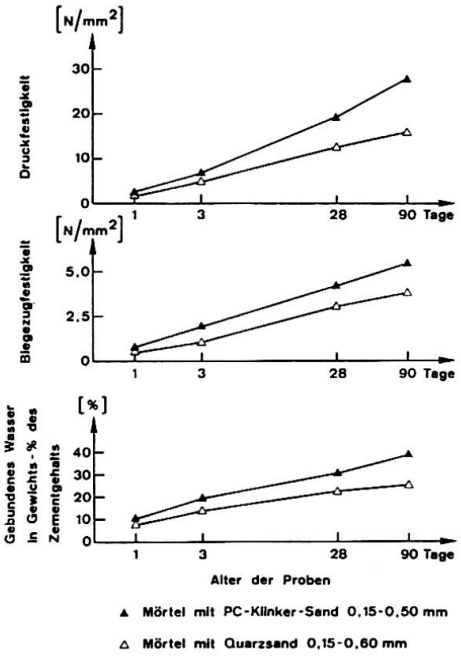

Fig. 2 Festigkeitsentwicklung mit der Zeit bei PC-Klinker-Beton und Kies-Sand-Beton

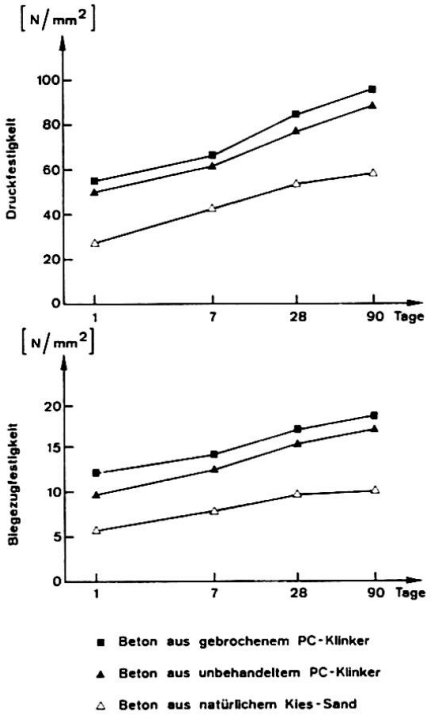

Fig. 3 E-Modul bei verschiedenen Belastungsstufen

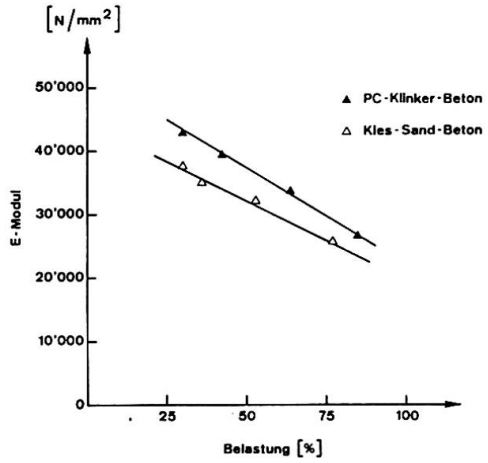

Fig. 4 Schwindmass

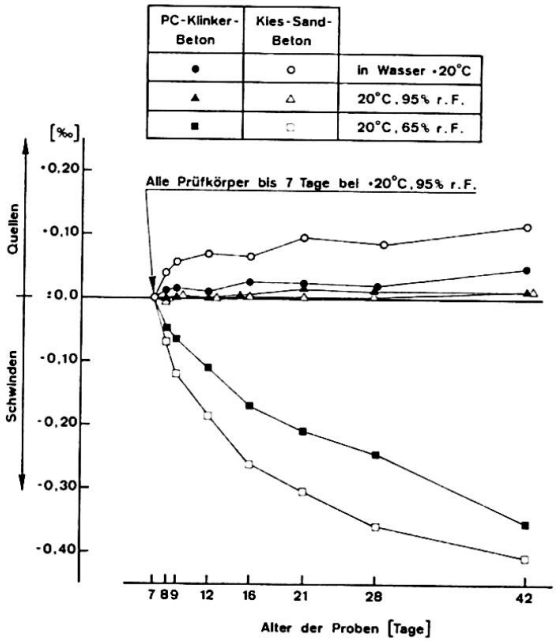

Fig. 5 Kriechen bei der Belastung von 12 N/mm²

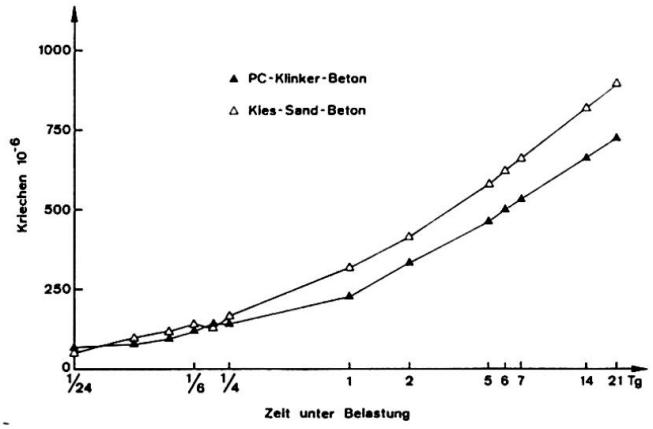

ZUSAMMENFASSUNG

Betone, die mit dem PC-Klinker als Zuschlagstoff hergestellt werden, weisen gegenüber den Vergleichsbetonen aus natürlichen Zuschlagstoffen wesentlich höhere Festigkeiten, einen erhöhten E-Modul und geringeres Schwind- und Kriechmass auf. Dabei wurde bei der Verwendung von gebrochenem PC-Klinker gegenüber dem unbehandelten Klinker eine weitere Verbesserung dieser Eigenschaften beobachtet. Die Hauptgründe für die erhöhte Qualität des Klinkerbetons sind die Erhöhung der Verbundfestigkeit zwischen der Zementpaste und dem Klinker und die Tatsache, dass auch ein Teil des Klinkers am Hydratationsprozess teilnimmt.

SUMMARY

Concrete made with Portland cement clinker as aggregate shows higher strength and Youngs-modulus, as well as lower shrinkage and creep compared to the concrete made with natural aggregate. Furthermore an additional improvement of the concrete properties was observed when crushed clinker instead of non treated clinker has been used as aggregate. The main reason for the improvement of the Portland clinker concrete is the increase of the bonding strength between cement paste and clinker, and the fact that one part of the clinker aggregate participates in hydration.

RESUME

En utilisant du clinker de ciment Portland comme granulat pour béton, on a obtenu des résistances très élevées, ainsi que des modules d'élasticité élevés et un retrait et un fluage réduits par rapport au béton confectionné à base de granulats naturels. En concassant le clinker avant l'utilisation comme granulat, on peut encore améliorer ces propriétés par rapport au clinker non concassé. Les raisons principales de la meilleure qualité des bétons avec granulat clinker sont la cohésion élevée entre matrice et granulats et le fait que le granulat participe également en partie au processus d'hydratation.

Development of Extremely High Strength Concrete Railway Bridges for the Japanese National Railways

Développement de béton à très haute résistance pour les ponts ferroviaires des Chemins de Fer Nationaux Japonais

Entwicklung von höchstfestem Beton für Eisenbahnbrücken der japanischen Staatsbahnen

FUJIO MACHIDA
Superintendent
Shimonoseki Construction Division, JNR
Shimonoseki-shi, Japan

1. Introduction

In JNR, longer span concrete bridges have been built to abate train noise. This is because not only concrete bridges are easy to maintain but also longer span bridges are necessary for grade separation and riparian improvement to construct Shinkansen or elevated structures of urban railways.

With the elongation of bridge span, the ratio of the dead load to the whole design load has increased. In Japan, railway lines in many cases pass on the soft ground of alluvial formation, and also the earthquake often occurs. Therefore, the reduction of the bridge weight itself has come to be one of the greatest subjects.

There are two ways of the weight reduction — the adoption of light weight concrete and the adoption of extremely high strength concrete which reduces the section of the member and makes the structure light.

In the case of the light weight concrete, there are several problems in physical characteristics or in regulation of deflection, and it was limited to comparably small spanned elevated structures. Studied was the application of the extremely high strength concrete to long span bridges.

With the water reducing agent of alomatic sulphonic compound, a concrete mix proportion test and a basic characteristic test have been executed to develop the high strength concrete suitable for the ordinary concrete placing method.

2. Physical property of extremely high strength concrete

In JNR, studies on the extremely high strength concrete with compressive strength up to 1,000 kg/cm^2 have been made since 1970, and the three methods of producing this concrete are as follows:

(1) Water cement ratio reducing method by using water-reducing agency.

(2) Method using artificial aggregate of crinker.

(3) Auto-clave curing method.

Of the above mentioned methods, the method (1) is the most favorable one from the viewpoint of the ordinary facilities and past long experiences of work execution.

With the extremely high strength concrete produced by the method (1), it has been proved that the quality of the aggregate have much effect on the concrete strength and that the optimum ratio of fine aggregate is 30 to 40%. The physical property of hardened concrete has been examined. Furthermore, 5-meter T-section type girders have been tested to get some guidance for work execution.

(1) Studies on mix proportion of concrete

For studying the characteristic of mixed concrete, tests have been made on the following mix proportions;

a. Fine aggregate ratio; 10, 20, 30 and 40%

b. Coarse aggregate; river sand and gravel, and crushed stones

c. Unit cement volume; 500, 700 and 900 kg/m^3

d. Max. size of coarse aggregate; 10 and 20 mm

e. Admixture; with and without admixture

As a result of the tests, it is found that if the ratio of fine aggregate is under 20%, the concrete is rough, especially when unit cement volume is less than 500 kg/cu. meter. Therefore, the optimum ratio of fine aggregate is about 30 to 40% with both the river sand and gravel and the crushed stones.

(2) Compressive strength

With the unit cement volume 700 kg per cu. meter, compressive strength is about 950 - 1,050 kg/cm^2 with admixture, and about 530 - 760 kg/cm^2 without admixture. With the quick cement the short term compressive strength of concrete is as high as 437 kg/cm^2 at the age of one day. When the ratio of fine aggregate is less than 20% and unit cement volume is 500 kg/m^3, the strength of concrete becomes lower. With the unit cement volume of 700 kg per cu. meter, the crushed stones and river sand and gravel keep high strength regardless of the ratio of fine aggregate, the maximum size of aggregate, whether 10 or 20 mm, showing the same strength.

(3) Modulus of elasticity

Modulus of elasticity of extremely high strength concrete is $3.0-4.0 \times 10^5$ kg/cm^2.

(4) Variety of concrete strength due to the difference of stone quality of aggregate

The results of compressive and bending tests show that effect of the stone quality is as much as 25% of compressive strength. It is therefore impossible to produce the extremely high strength concrete with the aggregate containing weak stones such as serpentine, weathered rock, shale, or limestone. What is necessary is to select the strong aggregate based on the results of accurate tests with stone quality.

(5) Compressive fatigue strength

Compressive fatigue test has been done using a concrete cylinder, 10 cm in diameter and 20 cm long. The upper load limitation of the compressive fatigue test was as 55, 60, 65, 70 and 80% of the static ultimate strength, while the lower load limitation was kept a certain value.

Although the results of the test showed some deviation for the certain stress ratio, the fatigue strength of extremely high-strength concrete is deemed to be about 55% of the static ultimate strength.

(6) Creep

Creep measuring test has been done with four test pieces — two of them for 100 days under the load intensity of 170 kg/cm^2 and the others for 300 days under that of 270 kg/cm^2. The creep coefficient was about 0.8.

(7) Ultimate strain

Measured were the stress-strain curve and the shape of stress distribution near the failure point.

The strain of extremely high-strength concrete is about 3‰ at the highest stress point, and that of the ordinary concrete is about 2.5‰. Stress distribution has shown the trapezoid distribution, intermediate between the triangular and rectangular ones.

(8) Durability against freezing and thawing

Test has been done by the method of the ASTM C 200. The comparison between the durabilities of extremely high-strength concrete σ_{28} = 900 kg/cm^2 strong and that of the ordinary concrete with no entrapped air σ_{28} = 330 kg/cm^2 strong was made to show that in case of the ordinary concrete the modulus of the vibro-elasticity became below 50% at 75 cycles and in case of the extremely high-strength concrete, even with no entrained air, the concrete barely weathered at as much as 450 cycles. The extremely high-strength concrete is superior to the ordinary one with comparatively low strength in the durability against freezing and thawing.

3. Concrete placing test

The extremely high-strength concrete was applied firstly to the Ayaragigawa Bridge on the San-yo Shinkansen. Prior to the construction of the bridge, concrete placing test was done to check the workability at the work site.

Concrete mix-proportion was determined to be the design standard strength σ_{ck} = 600 kg/cm^2, with the slump as 8 ± 2 cm, water cement ratio as 31%, sand aggregate ratio 34%, unit cement volume 484 kg per cu. meter, and water reducing agent NL 1400, 0.9% of the unit cement volume.

The test has been done four times in all with the 5-meter long beams, whose section is the same as that of the Ayaragigawa Bridge and sheath is bent up as the beam end.

The results show that if slump become less than 8 cm, the mobility of concrete turns to be poor, poor consolidation appearing along the upper side of sheaths. When slump becomes more than 16 cm, the segregation of the aggregate happens. Therefore, as a counter-measure, the variation of the

surface water of fine aggregate has been kept small, and the placement of frame vibrators reviewed. The diameter of the vibrator was made 35 mm, and the distance between the frame and reinforcement 40 mm, so as to make it easy to insert the rod vibrator. And also the mix-proportion of concrete has been adjusted as follows: slump is as 12 ± 2.5 cm, water cement ratio as 30%, sand aggregation ratio as 40%, unit cement content as 484 kg per cu. meter, water reducing agent as 0.75% of the unit cement weight.

After curing the beams, the compressive strength of concrete of each part of them was estimated by both ultra-sonic nonfailure method and core specimen by boring.

Test results have shown that the compressive strength of 28-day-age is valued as maximum 780 kg/cm^2, minimum 635 kg/cm^2, and mean 753 kg/cm^2, respectively.

4. Application of extremely-high-strength concrete

1) T-section type girder

The extremely-high-strength concrete was firstly applied in Ayaragi-gawa Bridge constructed, in winter, secondly Kagetsu Bridge in summer, both on the San-yo Shinkansen.

Explain in detail below is the construction of Ayaragigawa Bridge.

Ayaragi River crosses the San-yo Shinkansen in 45 degrees in Shin-Shimonoseki Station.

As the piers were not allowed to stand inside the river, and the crossing angle of the railway with the river was limited to 60 degrees, the span was 49 meters long with the total length of bridge 50 meters. The bridge consists of single track 4T-section girders and double-track 8 T-section girders, totaling 12 girders.

By the use of extremely-high-strength concrete of σ_{ck} = 600 kg/cm^2, it enabled to lower the girder depth, and to reduce the weight of the main girder to less than 150 tons, which was the limit in crane handling. As a result, erection work was easily carried on and completed on schedule.

The girder depth is one 18th of span length, which is strictly specified by the design standards of Shinkansen structures.

(1) The main girders were manufactured in manufacturing yard near the work site.

(2) Concrete plant about 1 km apart from the work site was used.

(3) Concrete placing method

a. Received mixed concrete in bucket from mixing car at the work site, then the bucket was carried to the placing site by gantry crane of 2.5-ton capacity.

b. Two buckets of concrete were placed from bottom of girder to the top of web as lower portion and then placed upper flange as upper portion. Upper portion was placed 30 to 60 minutes after lower portion was placed.

Concrete volume was 41 cu. meters for the lower portion and 17 cu. meters for the upper, totaling 58 cu. meters. Concrete placing was finished in about 5 - 6 hours, so the rate of placement was 10 cu. meters per hour.

c. Change of slump was comperably small because the transportation time was as short as 5 to 20 minutes. When concrete arrived much quicker than usual, the slump at the work site was sometimes a little larger than the slump at the plant.

d. Consolidation

8 bar vibrators (diameter 35 mm, 12,000 rpm) and 12 frame vibrators (1/4 HP, 345 rpm) were set zigzag at 3-meter intervals, 60 cm high and 140 cm high respectively from the bottom. Especially at the bent up part of sheaths, consolidation work were executed by injecting the bar vibrators between the frames and the reinforcement.

(4) Curing

As it was winter, all beams were covered by sheet to keep the temperature inside between 10 and 15°C. The maximum temperature showed 50°C in 15 hours after concrete placing. The temperature difference between the atmosphere and inside the sheet was 40°. The upper face of beam flange was covered curing mats.

(5) Compressive strength

Concrete cylinders each 10 cm in diameter and 20 cm long, were used as concrete specimen for compressive strength test. The compressive strength at the age of 28 days by standard curing was 659 kg/cm^2, where the number of specimen were 39, and standard variation 25.9 kg/cm^2, that is to say, coefficient of variation 3.9%, and entrapped air 0.8% at mean value.

(6) Erection

After beams were moved side-ways, they were transported to the erection site by truck, and then hanged and erected by two cranes of 127-ton capacity.

2) Prestressed concrete through truss bridge

A concrete through truss bridge was built crossing over the prefectural road to construct a line to the Rolling-stock Base from Hiroshima Station.

The bridge being in the urban area near the Station, there was strong need to reduce train noise. The through type had to be adopted because of road clearance below the bridge. From these reasons, it was quite advantageous to adopt the through truss.

(a) Experimental studies

(1) For the study of panel point portion, fatigue strength test, photo elastic test and concrete placing test were executed.

(2) Static load bearing test was conducted on the model truss, whose scale was about one third of truss bridge and composed of three panels, 8.1

meters of span length, to confirm ultimate strength of truss structure.

(b) Design of the Iwahana through truss bridge

(1) General structure

i) From many types of truss, Waren truss type was adopted because the number of the chords is small.

ii) Floor structure

The composite structure embodying slab and lower chord is effective for earthquake proof and reduction of concrete volume. However, the structural analysis is complex and concrete volume placed at work site becomes large. Therefore, non composite structure, whose stress distribution is easy to estimate, was adopted. Floor slab of hollow type was manufactured at concrete plant with the concrete of design standard strength 500 kg/cm^2.

iii) Partition of member of the truss

Precast members were divided as follows:
panel points, upper and lower chords, diagonals, cross beam, upper cross beam for each panel. Although the concrete joint was adopted at upper chord for the purpose of absorbing the errors in manufacturing and construction work, resin joint was generally used at other parts.

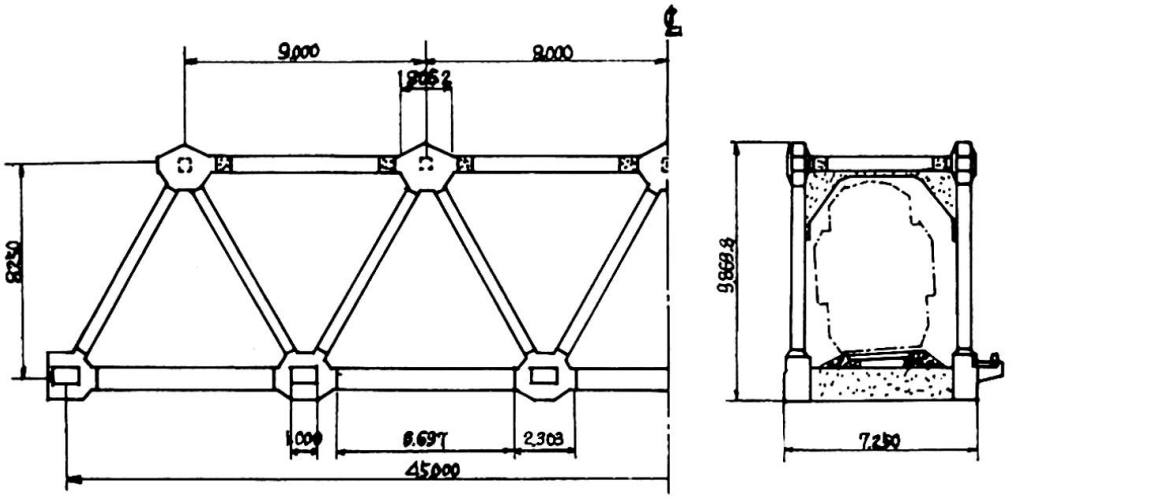

Fig. Iwahana PC Truss Bridge

(c) Manufacturing of members

The precast members were manufactured at the Okayama concrete plant of OKK corporation about 160 kilometers away from the work site.

To manufacture members such as lower chords, diagonals and chords, plane truss dimension at real scale was made at first. Then the frame were built up between block panel points, and then high strength concrete was placed. Thus it was possible to make good connection at each end face of the precast member. The upper chords and the cross beams were separately manufactured because of concrete joint.

(d) Erection

Erecting work was executed with the scaffolding at the work site as follows:

(1) Lower chords and lower panel points were connected in all length of span.

(2) Connecting middle cross beams.

(3) End cross beams were concrete-placed at work site.

(4) Laying of slabs.

(5) The diagonals of each panel were fablicated temporarily on the ground using hanging apparatus.

(6) Temporary diagonals fablicated in (5) were placed on the scaffolding and set.

(7) The upper panel points were set and the cables of the diagonal chords were tensioned.

(8) Upper cross beams and upper chords were set at the due place using hanging apparatus.

(9) Concrete for joints of the upper cross beams and upper chord members were placed.

5. Observation

The span length of concrete railway bridge will be come longer along with the development of high-strength concrete to solve the environmental problems of such projects as riparion improvement, highway widening and grade separation.

In addition, there are strong needs to shorten the construction periods and to abate the noise during construction, and the precast method proves in bridge construction.

The extremely-high-strength concrete is quite effective to reduce dead weight of concrete bridge of long span.

For instance, in the case of 60-meter span length, the dead load can be reduced by 14% by using σ_{ck} = 600 kg/cm^2 concrete and about 29% by using σ_{ck} = 800 kg/cm^2.

In the case of the continuous bridge by precast concrete block method with the center span of 100 meters and each side span of 60 meters with

standard design strength σ_{ck} = 400 kg/cm^2, concrete volume is estimated at 4,000 cu meters, and pier reaction about 4,000 tons, and with the standard design strength σ_{ck} = 800 kg/cm^2, concrete volume is estimated at 3,400 cu meters, and pier reaction 3,000 tons.

Hence, it can be said that prestressed concrete truss is much economical.

Necessary for further development of prestressed concrete bridge are not only the enlargement of span length but also the development of panel and slab structures, taking into considering erection methods. Necessary for further development of prestressed concrete bridges.

In JNR, prestressed concrete through truss with the span length of 72 m, now planned for track additioning of the Nippo Line in Kyushu and also deck truss with the 45-m long span in the construction work for the Tohoku Shinkansen.

SUMMARY

On the Japanese National Railways, longer concrete bridges are increasingly used to reduce train noise. Studies on ultra high-strength concrete, especially that using aromatic sulpho compounds water reducing agent, have been made. Mix proportion tests and tests for basic characteristics of concrete have also been carried out. PC T-section girders were used in the construction of the Ayaragigawa Bridge, and PC through trusses on the Iwahana Bridge.

RESUME

Récemment, aux Chemins de Fer Nationaux du Japon, on a adopté des poutres en béton de plus en plus longues dans le but de réduire le bruit des trains. Des études sur le béton précontraint à très haute résistance ont été effectuées en utilisant un agent aromatique sulfuré réduisant l'eau à utiliser. Les expériences ont été réalisées avec des mélanges de proportions différentes afin d'étudier les caractéristiques fondamentales de ce béton. Des applications ont été faites, sur le Pont Ayaragi avec des poutres en béton précontraint de sections en T, et sur le Pont Iwahana.

ZUSAMMENFASSUNG

Seit kurzem werden von den Japanischen Staatsbahnen immer häufiger lange Brücken gebaut, um den Lärm der fahrenden Züge zu vermindern. Um diesen Forderungen nachzukommen, werden jetzt bei den JNR Versuche mit höchstfestem Beton insbesondere unter Zusatz von aromatischen, Anmachwasser sparenden Lösungsmitteln durchgeführt. In den Versuchen wurden die Eigenschaften verschiedenartig zusammengesetzten Betons geprüft. Höchstfeste Betone fanden Anwendung im Brückenbau bei den Brücken über den Fluss Aiyaragi und über den Iwahana.

Studies on Prestressed Concrete Pile with High Torsional Strength

Etude des pieux en béton précontraint ayant une grande résistance à la torsion

Untersuchungen an Spannbetonpfählen mit hoher Torsionsfestigkeit

JIRO MURATA
D. Eng. Professor
Tokyo Metropolitan University
Tokyo, Japan

KATSUYA OKUYAMA
M. Eng. Section Chief
RD Dept. Nippon Concrete Industries Co. Ltd.
Tokyo, Japan

KATSURO KOKUBU
M. Eng Associate Professor
Nagaoka Technical College
Nagaoka-shi, Niigata, Japan

1. Introduction

Precast concrete piles used for pile-bent structures and torsional-motion driving methods require high torsion resistance. Since the rigidities of concrete members subjected to torsion are greatly reduced on development of cracking, it is thought important for cracking strength to be increased. The studies described herein aimed for increase of torsion resistance of precast concrete piles through introduction of mechanical prestress in the axial direction and chemical prestress. The methods of introducing large chemical prestress, the effect of mechanical prestress or chemical prestress, and the torsional properties were examined.

As a result of the experiments, the torsional strengths of mechanically and chemically prestressed piles were found to be approximately 4 times those of reinforced concrete piles and approximately 1.5 times those of piles with only mechanical prestress.

2. Manufacture and Testing

The testing was performed divided into the 4 steps described below:

Step 1. Examination of effect of chemical prestress using model piles.
Step 2. Examination using full-sized piles.
Step 3. Study of method for developing adequate chemical prestress.
Step 4. Study of effect of combining mechanical prestress and chemical prestress.

2.1 Manufacture of Test Specimens

The shapes and dimensions of the specimens used at the respective steps are as indicated in Fig. 1 and Fig. 2. It should be noted that the hollow cylindrical specimens used for internal pressure tests were of outer diameter of 200 mm (inner diameter, 106 mm) and length of 200 mm, and were provided with 2.6-mm spiral reinforcement.

Mix Proportions

With concrete of w/c = 0.37, s/a = 40%, cement content of 420 kg/m^3, using water-reducing admixture for slump of 12 cm as a basis, expansive components were used at rates of replacement of 42 kg/m^3 for Step 2, 55 kg/m^3 for Step 3, and additions of 35 kg/m^3 and 45 kg/m^3 for Step 4.

Specimen Molding and Curing

In the first step, reinforcing steel cages were fitted into molds after which concrete was placed and consolidated by vibration. On stripping the next day, curing was performed in water at 20±1°C.

At Steps 2, 3 and 4, reinforcing bar cages were fitted inside molds and centrifugal consolidation was performed after placing of concrete. Curing was by steam at a maximum temperature of 65°C, with curing in water carried out after stripping of molds. Further, at the 4th step, in order to preclude mold restraint during curing, paraffin was coated on the inner surfaces of molds to a thickness of 2 mm. Piles at the 3rd and 4th steps in which mechanical prestress was introduced were manufactured by a pretensioning method.

2.2 Methods of Testing

Torsion tests were carried out in all cases for pure torsion with one end fixed and the other subjected to torque. Loading was done in fixed increments until cracking was produced upon which the load was removed and then reapplied up to failure. Rotation angles of members were measured by dial gauge at the middle 20-cm portions in the axial direction for model piles and 90-cm portions for full-sized piles.

Internal pressure tests were performed by linear loading on inserting two small specially made jacks into the hollow cylinders. By applying internal pressure, specimens failed due to cracks produced from their exterior surfaces.

The uniaxially restrained expansion tests used in Steps 1 and 2 were performed on specimens with reinforcement ratio of 0.64%, and length changes of axial reinforcement were measured with dial gauges at Step 1, while at Step 2, the distances between gauge marks at three points on cover plates at each of the specimen ends were measured with contact-type gauges. Lengths prior to concrete placement were taken as bases in both cases.

3. Results and Deliberations

3.1 Method of Attaining Adequate Chemical Prestress

With expansive concrete the strength must not be allowed to be reduced by increased volume of expansive materials to result in offsetting chemical prestress. Almost all of the chemical prestress is transferred during steam curing and part of it is lost later on stripping of molds. In order to prevent this from happening, it is advantageous to cause the reaction to expansion to be carried by spiral reinforcement and the spiral reinforcement to be arranged as much as possible toward the outside. According to the results given in Table 3, effects of 6 to 8% were seen when curing was performed eliminating the influence of the mold, and 12 to 14% when spiral reinforcement was expanded outward.

3.2 Cracking Moment

Fig. 3 is a summarization of cracking strengths in the results of torsion tests performed at Steps 1 and 2. It can be seen that shear stress at the time of crack production is increased in correspondence with restraining reinforcement ratio. The shear stresses at crack production of piles not using expansive additives were 29.8 and 21.6 kg/cm^2 respectively for Specimens N01 and N3.

In restrained expansion of concrete, it can be considered that Eq. (1) is applicable for age of t and reinforcement ratio of p_i.

$$K_t = \sigma_{cpit} \cdot \varepsilon_{pit} = E_s \cdot p_i \cdot \varepsilon^2_{pit} = \text{constant} \quad \ldots\ldots\ldots\ldots\ldots\ldots \quad (1)$$

where ε_{pit} : expansion strain at age t and reinforcement ratio p_i

σ_{pit} : chemical prestress at age t and reinforcement ratio p_i

E_s : modulus of elasticity of restraining steel

The chemical prestress transferred to a member with reinforcement ratio of p_i is according to Eq. (2) when K_t is determined for restrained expansion specimens.

$$\sigma_{cpit} = \sqrt{K_t \cdot E_s \cdot p_i} \quad \ldots\ldots\ldots\ldots\ldots\ldots\ldots\ldots\ldots\ldots \quad (2)$$

For the sake of simplicity in this case, the reinforcement ratios in the axial direction and the circumferential direction of the pile were converted to a 45-degree direction, and the chemical prestress transferred to the 45-degree direction of the pile at this reinforcement ratio was estimated. With the concretes used in the piles at Steps 1 and 2, the chemical prestresses estimated from K are 14.1 kg/cm^2 in the 45-degree direction of the pile E4 and 12.1 kg/cm^2 for E3.

It is seen from Fig. 3 that by superimposing cracking strength of concrete not using expansive additive on the estimated value of chemical prestress the result approximates the stress intensity at the time of crack production of an expansive concrete pile. In effect, the torsional strength of the expansive concrete pile was approximately 1.7 times greater at spiral reinforcement ratio of 0.73% for the full-sized piles in Step 2.

Assuming that cracking due to torsion of a member prestressed in two directions follows the maximum stress theory, Eq. (3) is obtained.

$$M_{tpc} = M_{tc} \sqrt{1 + \frac{\sigma_{cpv} + \sigma_{cpl}}{\sigma_{ct}} + \frac{\sigma_{cpv} \cdot \sigma_{cpl}}{\sigma_{ct}^2}} \quad \ldots\ldots\ldots\ldots\ldots\ldots \quad (3)$$

where σ_{cpv}, σ_{cpl} : prestresses in circumferential and axial directions

σ_{ct} : tensile strength of concrete

M_{tc}, M_{tpc} : cracking moments of non-reinforced and prestressed concretes

Eq. (3) coincides with Cowan's equation when prestress in the circumferential direction is taken to be zero. The cracking moment of S0 with mechanical prestress only was 2.56 tm. Assuming that tensile strength of concrete is about 1/13 of compressive strength, the estimated value according to Eq. (3) becomes 2.69 tm and the ratio of 1.05 indicates a good approximation. The cracking strength of W45 handled in a manner for chemical prestress to be sufficiently introduced was 3.80 tm, approximately 1.5 times that for a pile with mechanical prestress only.

3.3 Torsional Rigidity and Ultimate Yield Strength

Fig. 4 indicates the relationships between torsional moments and torsional angles of SO and W45. There were no great differences in torsional rigidities until production of cracks, while stiffnesses after production of cracks were extremely reduced. The precast concrete piles being marketed in Japan at present have small quantities of spiral reinforcement, and with yield strengths reduced accompanying crack production, it is thought they would be hazardous used as structural members subjected to torsion. The pile W45 had an increased quantity of spiral reinforcement for the purpose of introducing strong prestress, and as a result there was no reduction in yield strength accompanying crack production at an ultimate yield strength of 4.35 tm; an increase of approximately 15% from the cracking strength of 3.80 tm was indicated. For piles to be used in pile-bent structures, there should be a necessity for determination of spiral reinforcement quantity of an extent that cracking strength can be maintained at the least.

With SO, to which only mechanical prestress was introduced, a single continuous crack developed in a direction at an angle of 30°∿35° to the axis. Piles to which chemical prestress and mechanical prestress were transferred showed numerous cracks at 45° or at angles close to 45°. This is an indication of good stress dispersion after crack production because of the increase in the quantity of spiral reinforcement.

4. Conclusions

The following results were obtained through torsion tests of piles made with expansive concrete which were mechanically prestressed:

(1) In case of manufacturing piles using expansive concrete, it was found advisable for the quantity of spiral reinforcement to be increased and at the same time to be arranged toward the outside as much as possible, and further, for restraint on concrete to be removed at an early period by stripping molds, with reaction to expansion made to be carried by spiral reinforcement. The result was that the increase in cracking strength was approximately 1.34 times greater.

(2) The torsional strength of piles with mechanical prestress of 47 kg/cm^2 was 2.56 tm, and using expansive additive at a rate of 45 kg/m^3 with spiral reinforcement ratio of 1.54%, the result was 3.80 tm, or an increase in strength of approximately 1.5 times.

(3) In the case of the pile W45, increases in cracking strength and ultimate yield strength were attained through increase in spiral reinforcement ratio. It was confirmed through this that cracks could be well dispersed.

(4) It is thought that cracking strengths of expansive concrete members can be estimated by obtaining chemical prestress by $\sigma = \sqrt{K \cdot E \cdot p}$ and by superimposing on strength of concrete not containing expansive additive.

References

1. Masatane KOKUBU: Use of Expansive Components for Concrete in Japan, Expansive Cement Concretes, ACI SP-38, Nov. 1972.

2. Committee of P.C.E.A.: Report of Commission on Pilebent, Jour. of Japan Prestressed Concrete Engineering Association, Vol. 16, No. 5, Oct. 1974.

Table 1. Chemical Composition of Expansive Additive
(Calcium Oxide Type)

Chemical Analysis, (%)								Specific Surface (cm^2/g)	Specific Gravity
Ig.Loss	SiO_2	Al_2O_3	Fe_2O_3	CaO	MgO	SO_3	Total		
0.9	11.4	2.7	1.6	79.4	0.8	3.3	100.1	2440	3.18

Table 2. Torsional Strength Results

Step	Kind of Concrete	Pile No.	Condition of Mold	Spiral Dia.-Pitch (mm)	Spiral Ratio (%)	Torsional Moment Cracking (t·m)	Torsional Moment Ultimate (t·m)	Comp. Strength (kg/cm^2)
1	W:C:S =1:2.5:4	N01	Mold restraint	1.8-10	1.37	5.10×10^{-2}	5.23×10^{-2}	564
	W:C:S =1:2.5:4 E_x=Cx0.1	E11		1.8-10	1.37	9.19×10^{-2}	7.12×10^{-2}	455
		E12		1.8-20	0.68	6.86×10^{-2}	5.13×10^{-2}	
		E13		1.8-30	0.46	5.88×10^{-2}	4.56×10^{-2}	
		E12S		1.8-19.3 -45°	1.00	11.24×10^{-2}	10.62×10^{-2}	
2	C = 420	N3	Mold restraint	3-30	0.41	1.00	1.58	578
	C = 378 E_x = 42	E3		3-30	0.41	1.44	1.64	526
		E4		4-30	0.73	1.66	1.90	
3	C = 365 E_x = 55	D3	Mold restraint	4-30	0.73	2.84	3.05	473
		G3		(I)4-30 (O)3-50	1.06	2.96	3.73	
4	C = 420	S0		3-100	0.12	2.56	1.57	511
	C = 420 E_x = 35	U35	Paraffin coated / Mold restraint	(I)3-50 (O)4-30	1.06	3.00 / 3.01	3.81	566
		W35	Paraffin coated	(I)4-30 (O)4-30	1.54	3.42	4.53	
	C = 420 E_x = 45	U45	Paraffin coated / Mold restraint	(I)3-50 (O)4-30	1.06	3.27 / 3.04	3.88	541
		W45	Paraffin coated	(I)4-30 (O)4-30	1.54	3.80	4.35	

Test results averages of 2 specimens. Six 7-mm bars used as axial reinforcement in all cases. Mechanical prestress of 47 kg/cm^2 introduced in axial direction in Steps 3 and 4. (I): inner spiral reinforcement. (O): outer spiral reinforcement.

Table 3 Internal Pressure Test Results of Hollow Cylinders

Steel Ratio (%)	0.71				0.83	
Covering of Spiral R. (mm)	10		1		1	
Condition of Mold	Mold	Demold	Mold	Demold	Mold	Demold
Cracking Load (t)	2.38	2.56	2.71	2.88	3.07	3.27

The value is the average of two measurements

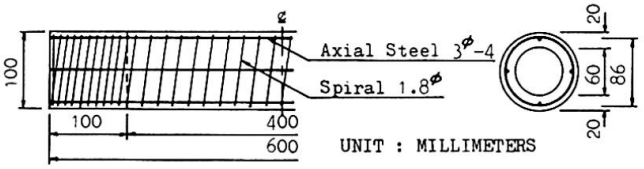

Fig. 1 Details of Model Pile

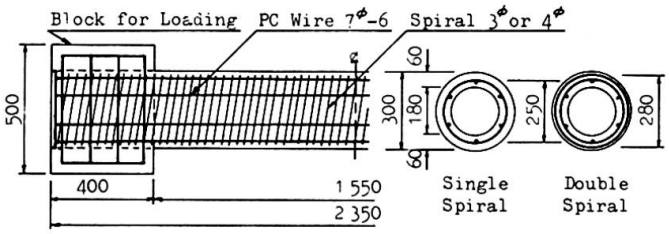

Fig. 2 Details of Full-sized Pile

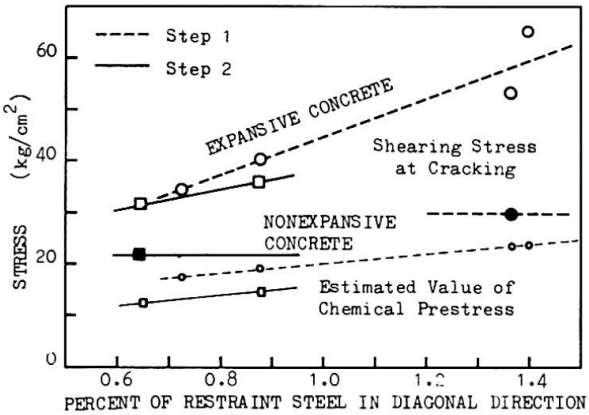

Fig. 3 Cracking Stress and Chemical Prestress

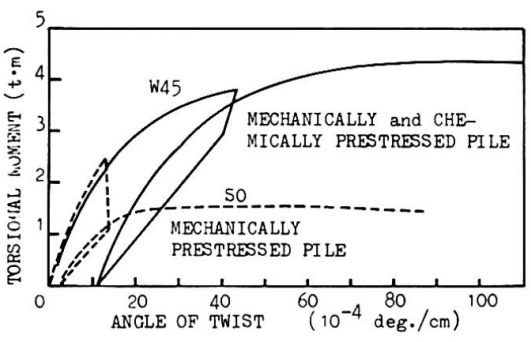

Fig. 4 Torsional Moment-Twist Curve

SUMMARY

Precast concrete piles used for pile-bent structures and torsional-motion pile-driving methods require high torsion resistance. In the experiments described here, mechanical prestress is introduced in the axial direction, added to which a considerable chemical prestress is introduced through increase in spiral reinforcement steel and release of mold restraint during curing, and torsional moments approximately 4 times those of reinforced concrete piles and approximately 1.5 times those of prestressed concrete piles are obtained.

RESUME

Un pieu préfabriqué mis en place par torsion requiert une haute résistance à la torsion. Dans les essais présentés ici, on a réalisé d'une part une précontrainte axiale introduite mécaniquement et d'autre part une précontrainte chimique obtenue par renforcement spiral et démoulage pendant le durcissement du béton. La résistance à la torsion de ces pieux est 4 fois, resp. 1,5 fois plus grande que celle de pieux en béton armé, resp. en béton précontraint normal.

ZUSAMMENFASSUNG

Spannbetonpfähle in biegebeanspruchten Konstruktionen, oder solche, die durch Eindrehen abgesenkt werden, erfordern eine hohe Torsionsfestigkeit. In den hier vorgelegten Versuchen wurde die Vorspannung in axialer Richtung einerseits mechanisch, andererseits auf chemischem Wege durch Verstärken der Spiralbewegung und Ausschalen während der Erhärtung des Betons eingetragen. Hiermit wird eine Torsionsfestigkeit erreicht, die 4 mal bezw. 1,5 mal so hoch ist wie diejenige von Stahlbetonpfählen bezw. normalen Spannbetonpfählen.

Recherches pratiquées en France dans le domaine des poutres de ponts, en béton précontraint par pré-tension, à durcissement accéléré par étuvage

Französische Untersuchungen über dampfgehärtete, vorgespannte Brückenträger

French Research on Prestressed Bridge Beams with Accelerated Hardening through Heating

M. BRACHET
Chef du Département Béton et Métaux
Laboratoire Central des Ponts et Chaussées

J. OLIVIER-MARTIN
Président
Syndicat des Procédés Industrialisés de Précontrainte

A. DENIS
Ingénieur
Service d'Etude Techniques des Routes et Autoroutes
Paris, France

L'application aux ponts des techniques de précontrainte par pré-tension a, en France, des références anciennes, datant du début de la précontrainte ; mais cette application ne se développe de manière sensible que depuis peu d'années, alors que l'essor de l'industrie de la pré-tension s'est réalisé d'abord dans le domaine des planchers précontraints (plus de 50 millions de m^2 par an), puis dans le domaine des composants de structure de plus grande taille destinés aux entrepôts, bâtiments industriels, parkings de grande portée. Ces composants sont fabriqués maintenant dans une quinzaine d'usines réparties sur tout le territoire ; ces usines mettent à la disposition des constructeurs de ponts, des poutres préfabriquées dont la longueur peut atteindre plus de 30m. et la précontrainte appliquée dépasser 4×10^6N.

Il en résulte que de tels produits possèdent des caractères spécifiques de l'industrie du béton manufacturé. En France, ces fabrications se caractérisent par :

- des tensions initiales importantes des armatures de précontrainte : 0,85 Rg ou Tg, et, plus récemment, 0,95 Tg
- des cycles d'étuvage permettant d'obtenir des résistances assez élevées, 30 à 35 N/mm^2 sur cylindre, pour détendre les armatures une ou deux fois par jour
- des résistances finales de béton élevées, permettant de faire subir aux profils de poutres des variations de contraintes dépassant 24 N/mm^2

Il est donc apparu nécessaire de vérifier l'aptitude au nouvel emploi de ces éléments en tant que poutres de ponts, compte tenu des conditions de fabrication mentionnées plus haut.

Dans ce but, et en prévision d'un développement de ces techniques dont l'intérêt est très général, la Direction des Routes du Ministère français de l'Equipement a fait procéder à une série de contrôles et d'essais systématiques lors de chantiers importants dans la région de BORDEAUX.

Ces essais se regroupent en 3 thèmes principaux :

- Vérifier ou améliorer les règles de calcul actuelles, en particulier pour ce qui est de l'évaluation des forces de précontrainte, compte tenu des particularités de la préfabrication - étuvage principalement. Nous avons intitulé cette recherche : «MESURE DES FORCES DE PRECONTRAINTE».

– Définir les moyens de contrôle en usine les plus appropriés pour obtenir et vérifier le niveau de qualité spécifié. Nous ne développerons pas ici ce second thème qui présente moins d'originalité que les deux autres : mais nous voulons néanmoins insister sur le caractère indispensable des recherches en matière de contrôles de qualité. Par exemple, on ne peut raisonnablement fournir de base valable au calcul des structures rendues hyperstatiques que si l'on sait maîtriser les déformations «isostatiques» des produits, ce qui implique la maîtrise des facteurs principaux de variabilité de ces déformations.

– Enfin, fournir des bases expérimentales au calcul des structures constituées par des éléments préfabriqués, solidarisés en structures hyperstatiques par coulage d'un béton de seconde phase. Nous avons intitulé cette recherche : «ETUDE DES ASSEMBLAGES».

I – MESURE DES FORCES DE PRECONTRAINTE

L'ensemble des recherches développées sur ce thème concerne l'influence de l'étuvage du béton sur l'évolution des forces de précontrainte en cours de traitement thermique et ultérieurement.

On sait que l'étuvage modifie, entre autres, les lois d'interaction entre deux phénomènes qui sont la relaxation et la dilatation thermique.

L'étude séparée de chacun de ces phénomènes sous l'influence de l'étuvage a fait l'objet de plusieurs publications. En revanche, l'étude de leurs interactions pose de très difficiles problèmes de métrologie. En effet, la principale difficulté réside dans la mesure de la force de précontrainte au coeur même du béton.

1°) Dans l'attente de mise au point de méthode de mesure directe, on a tenté de déduire l'évolution de cette tension, de celle - facilement mesurable - qui existe dans les portions d'armatures qui ne sont pas noyées dans le béton. Cette mesure a été faite à BORDEAUX et a montré l'importance de l'étuvage sur l'évolution des tensions pendant le traitement thermique et sur la stabilisation de la force de précontrainte pendant les premiers jours. L'influence du gaînage de certaines armatures a pu être notée, révélant ainsi les conséquences du développement de l'adhérence entre l'acier et le béton pendant le taitement.

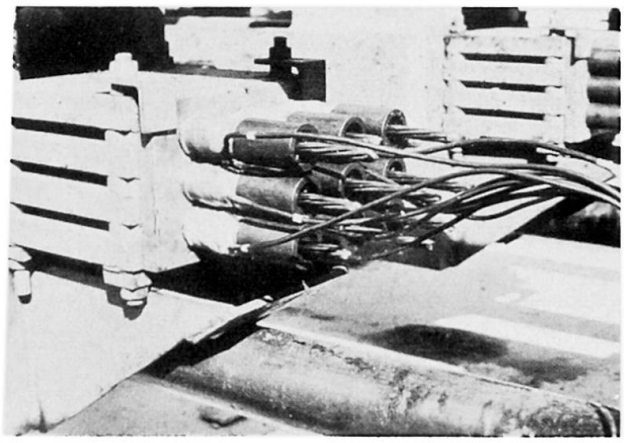

Fig. 1

Mesure des forces à l'ancrage

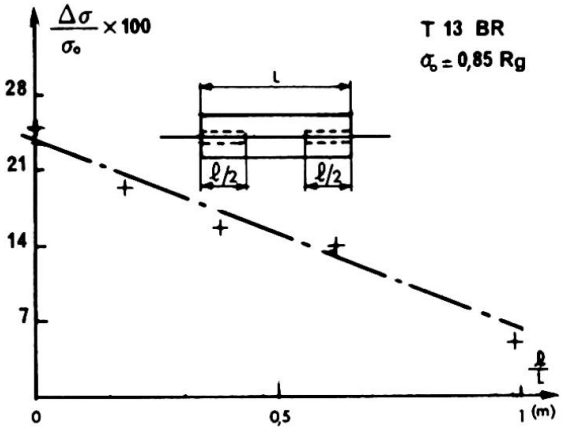

Fig. 2

Influence du gaînage

Des essais de flexion de poutre combinés avec les autres contrôles de fabrication semblent également montrer l'exactitude des prévisions de tension finale.

Les essais de MM. NADER et DARDARE du C.E.R.I.B. ont utilisé la même méthode : il a été considéré que l'évolution de la tension au coeur du béton devait, dans les cas réels, être intermédiaire entre celles, mesurées aux extrémités d'un montage de laboratoire, dans les deux cas suivants :

— montée rapide en température, donnant l'assurance qu'aucune adhérence n'existe à ce stade (fig. 3).

— montée en température après 4 heures de palier et relâchement, en fin d'opération d'une, partie de la tension correspondant à la dilatation «théorique» de l'armature (fig. 4).

De nombreux résultats intéressants ont été obtenus, en particulier le fait que l'élévation de température accélère la vitesse de relaxation qui devient beaucoup plus faible par la suite. Elle semble confirmer le point de vue empirique que, pour des tensions de l'ordre de 0,8 Rg, la perte de précontrainte à moyen terme diffère fort peu de celle de la même armature tendue à la même tension et conservée à température ambiante. Mais elle souligne l'importance de l'étuvage sur la cinétique des phénomènes.

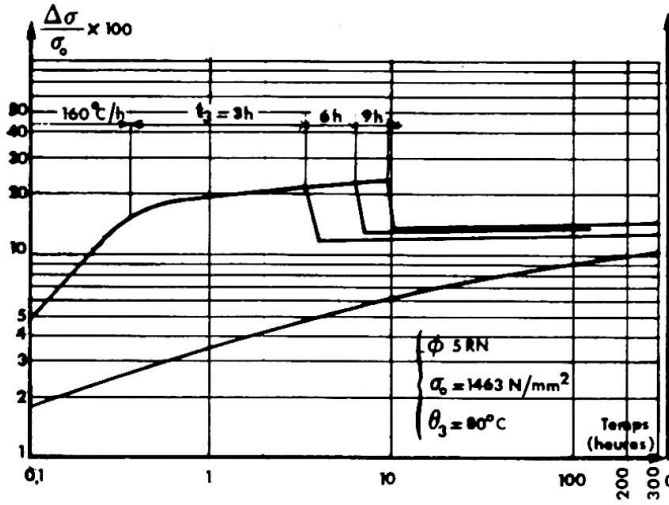

Fig. 3

Essai de relaxation : cas 1

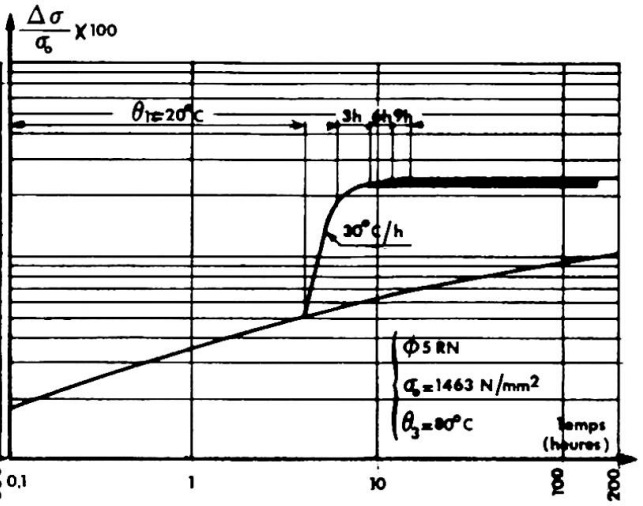

Fig. 4

Essai de relaxation : cas 2

2°) Pour confirmer ces résultats de méthode indirecte, et compte tenu de leurs incertitudes, nous avons choisi de développer les moyens de mesure directe des forces de précontrainte à l'intérieur du béton.

Le dispositif mis au point consiste à disposer sur les armatures de précontrainte un coupleur équipé de jauges de déformation thermo-compensées. L'ensemble est étalonné puis installé sur le banc de préfabrication.

Ce dispositif peu encombrant est isolé du béton environnant par du polystyrène expansé. Bien entendu, ce coupleur peut également être disposé hors du béton.

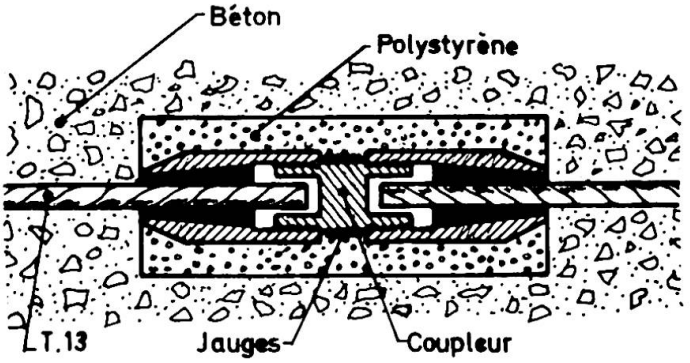

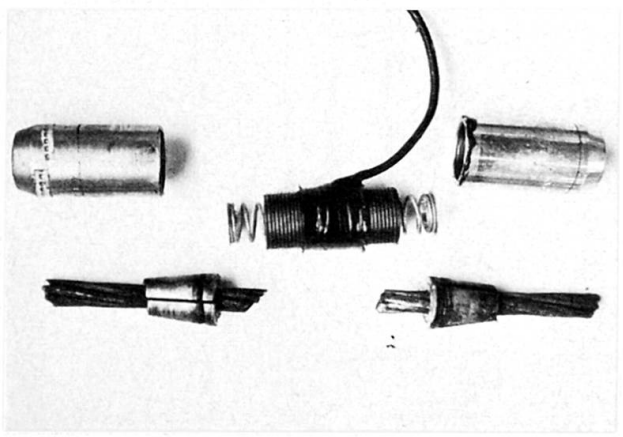

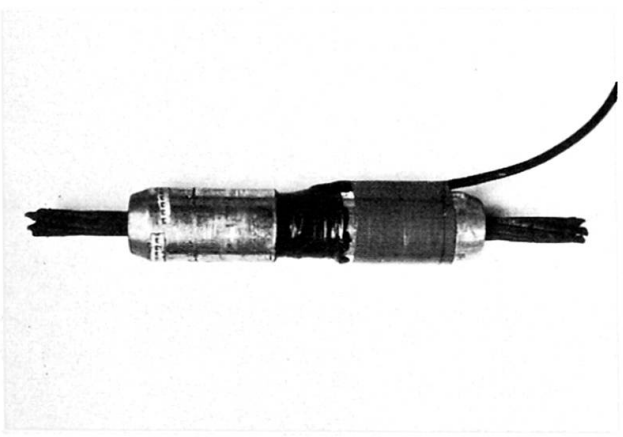

Fig. 5, 6, 7 - Schéma et vues du dispositif de mesure directe

Nous avons représenté ci-après les résultats donnés par ce dispositif de mesure dans le cas de préfabrication courante : la courbe A transcrit les indications données par le coupleur hors béton, la courbe B transcrit les indications données par le coupleur situé à l'intérieur du béton. Ce dispositif fait actuellement l'objet d'essais systématiques dans des conditions diverses de fonctionnement.

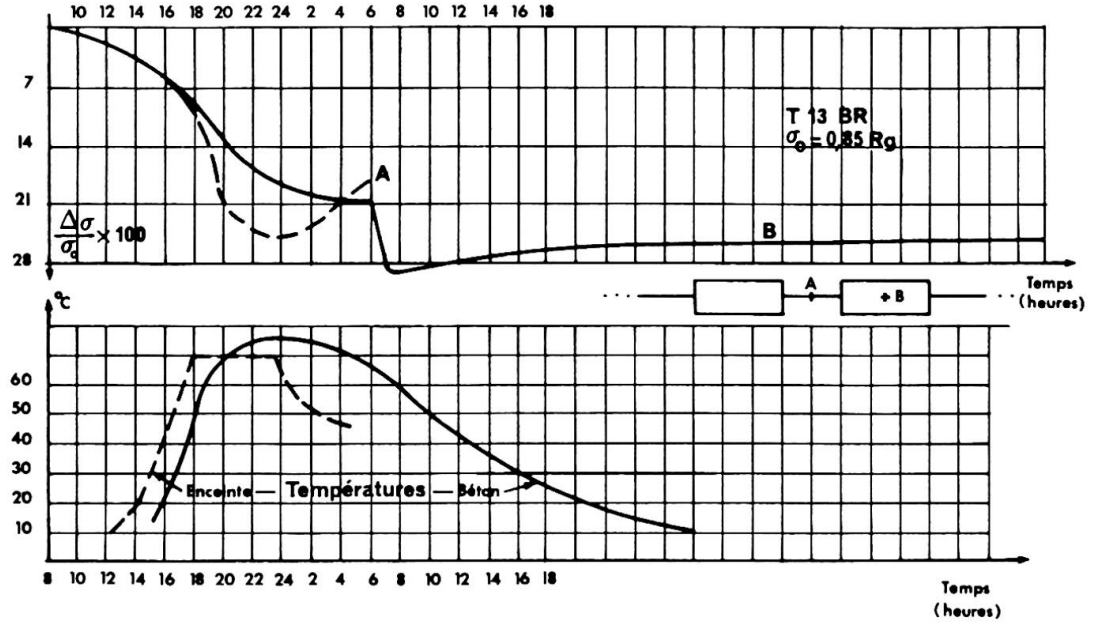

Fig. 8 - Résultats de la mesure directe

II – ETUDE DES LIAISONS

A l'occasion de la réalisation d'un ouvrage à travées hyperstatiques, nous avons constitué deux montages aux fins de les soumettre à des essais de chargement.

Le schéma statique de chacun de ces montages est représenté sur le graphique ci-après : les deux travées, d'abord indépendantes sont solidarisées par un béton coulé en place en seconde phase.

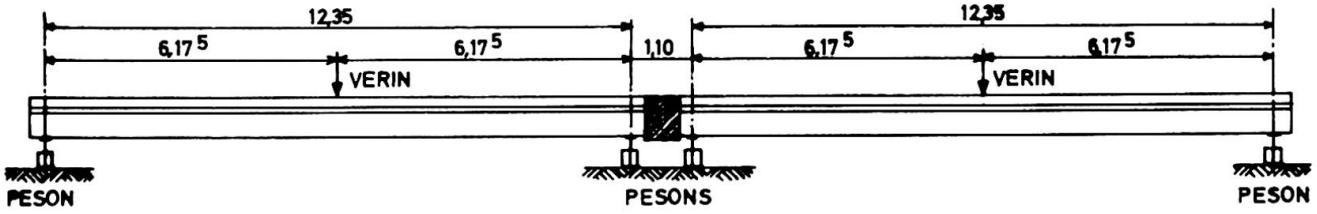

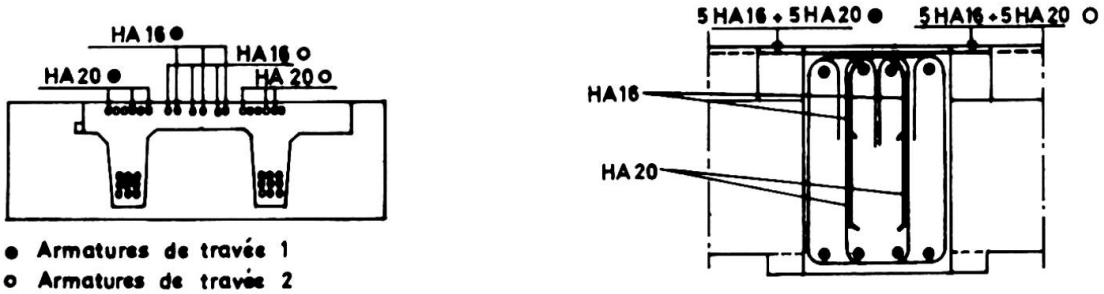

Fig. 9 - Schéma du montage soumis à essai

Lors des essais de chargement, différentes mesures sont prévues :

- mesure des réactions d'appuis par l'intermédiaire de huit pesons à lame de flexion,
- mesure des déformations des travées,
- mesure des rotations des sections par l'intermédiaire de jauges de déformations et de rosettes incorporées à différents niveaux et à différentes sections de travées.

II – 1 – Etude à court terme

Nous avons représenté, pour deux cas de charge prévus au programme d'essai, les variations du rapport entre la force appliquée et la réaction de chaque appui lorsque la force appliquée croît (courbe A suivie du n° de l'appui).

Nous avons indiqué également la valeur du rapport R/F en cas de disparition de la liaison hyperstatique (travée indépendante courbe B).

Enfin, nous avons indiqué les valeurs obtenues par voie théorique en partant d'un schéma statique proche du schéma statique réel (courbe C suivie du n° de l'appui).

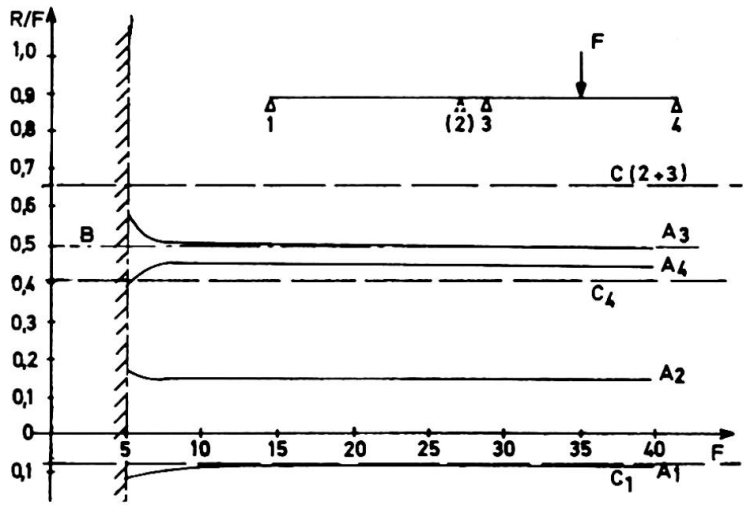

Fig. 10 - Cas de charge 1

Ce schéma statique est, selon le cas de chargement :

- pour le cas 1 (charge unique) : ouvrage à 2 travées dont les portées sont 13,45 m et 12,35 m, la charge étant appliquée dans la travée la plus courte,
- pour le cas 2 (charges dans chaque travée) : ouvrage à 3 travées dont les portées sont respectivement 12,35 m, 1,10 m et 12,35 m. Les charges sont appliquées au milieu des travées longues.

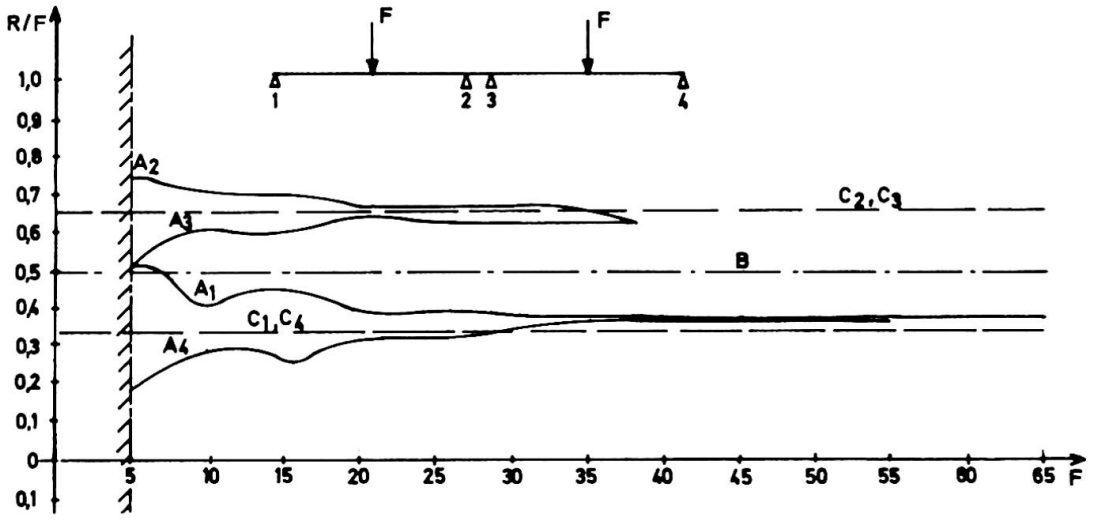

Fig. 11 - Cas de charge 2

Le dépouillement de ces essais est en cours mais les courbes obtenues à l'issue des mesures de réactions d'appuis dénotent un comportement linéaire proche du modèle théorique et ce, pour des charges appliquées atteignant 65 tonnes dans chaque travée.

Il est à noter que, pour le cas 2, il a été procédé à un déchargement pour F = 40 tonnes, puis une reprise des essais au niveau initial. Les nouveaux résultats confirment alors le comportement élastique du système puisqu'ils n'accusent pas d'écarts notables par rapport aux valeurs antérieurement constatées.

II – 2 – Etude à long terme

Pendant le premier semestre de l'année 1976, il sera procédé à un essai identique au précédent mais, par conséquent, un an après réalisation de la jonction entre les deux travées indépendantes, les résultats de cette nouvelle série seront communiqués au cours du congrès de l'A.I.P.C.

En attendant ces essais, le montage est régulièrement suivi par pesée des réactions d'appuis ; il a permis de mesurer les redistributions d'efforts entraînés par le fluage des poutres, dont les libres rotations sont gênées par le chevêtre coulé en seconde phase.

Bien que l'interprétation des résultats soit rendue très difficile par la grande sensibilité de la structure aux gradients thermiques, la méthode permet d'estimer l'incidence des redistributions d'efforts par fluage du béton sur le moment de fissuration du système et les modifications susceptibles d'en découler.

Les Auteurs remercient le laboratoire régional de l'Equipement de BORDEAUX, en particulier la section des bétons et la section de métrologie, dont le dynamisme et l'esprit d'initiative ont largement contribué au succès de cette campagne de mesures.

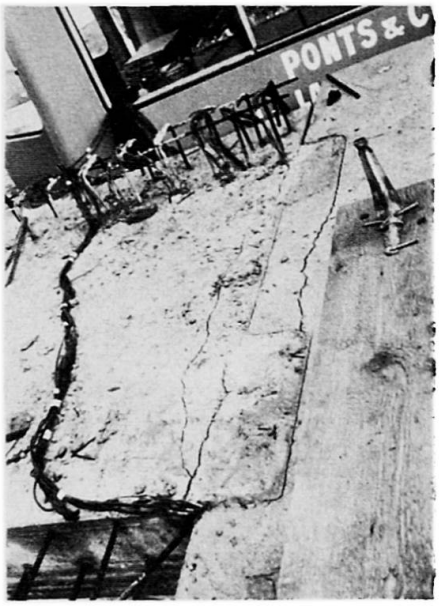

Fig. 12 - Chevêtre en fin de chargement (65 tonnes)

RESUME

Les auteurs dressent un premier bilan de la campagne d'essais et de contrôles entreprise à l'occasion de la préfabrication d'un grand nombre de poutres précontraintes par adhérence. Après un recensement des problèmes et des solutions possibles à la mesure des forces de précontrainte pendant et après un cycle d'étuvage du béton, ils proposent un moyen de mesure directe de la tension des armatures de précontrainte en contact avec le béton. La seconde partie traite de la réalisation d'assemblages d'éléments préfabriqués, les essais entrepris ayant pour but de vérifier le maintien du comportement hyperstatique des structures, aussi bien à court terme qu'à long terme.

ZUSAMMENFASSUNG

Die Autoren ziehen hier eine erste Bilanz der Versuche, die anlässlich der Herstellung einer grossen Anzahl von im Spannbett vorgespannten Trägern durchgeführt wurden. Auf der Basis einer eingehenden Diskussion der Probleme und Möglichkeiten einer Bestimmung der Spannkräfte während und nach einer künstlichen Erhärtung schlagen sie eine Methode vor, mit der die Spannungen im einbetonierten Spannstahl direkt gemessen werden können. Der zweite Problemkreis betrifft die Verbindung von Fertigteilen. Die durchgeführten Versuche klären das Verhalten statisch unbestimmter Tragwerke unter Kurz- und Langzeit-Belastungen.

SUMMARY

The authors draw first conclusions on a series of tests and controls made on the occasion of the prefabrication of a large number of prestressed beams. A census is made of problems and possible solutions for the measurement of prestressing forces during and after a heating-period. A solution is proposed for the direct measurement of the tension of tendons in contact with concrete. A second part deals with the assembling of precast elements and with tests for the evaluation of short and long term behaviour of statically indetermined structures.

Erection Method of Prefabricated Concrete Arch Bridges by Using a Pretensioned Cable Truss

Méthode de préfabrication d'un pont en arc, en béton, à l'aide d'un système porteur de câbles tendus

Herstellung einer Bogenbrücke aus Fertigteilen mit Hilfe eines vorgespannten Kabelträgers

A. WATANABE
Professor
T. IDEMITSU
Associate Professor
Kyushu Institute of Technology
Tobata, Kitakyushu, Japan

Introduction

There are a great number of narrow bays and deep valleys suited to be constructed concrete arch bridges in Japan, and the bridges have some good characteristics such as beautiful shape, no maintenance expenses etc., however only a few of them have been constructed in this country. The authors consider the main reasons of this fact as follows. The construction of a centre for a concrete arch needs a lot of time, labor and money, and the field works of cast-in-place concrete in an arch is quite difficult.

They have been studying the pretensioned cable truss (the PCT) for about ten years. As a result, it is found that wind resistance of the PCT is excellent and its displacement with live load is comparatively small. And these characteristics are good for the erection of bridges, therefore, they attempted to build up a prefabricated concrete arch bridge by using the PCT.

2. Pretensioned Cable Truss

The PCT was deviced by the authors and was originally intended to be as a temporary structure for the erection of bridges. It can be briefly considered as a suspension bridge having the lower cables instead of the stiffening frames. An example is shown in Fig.2. Upper and lower cables are connected with several hangers in which tension meters and turnbuckles are inserted, and the cable truss is formed. The necessary amount of pretension is introduced into the truss by operating jacks and chainbrocks inserted at the end of upper cables and in hangers respectively, controlling the tension of hangers with the meters inspection.

The erection system is generally composed of two PCT in parallel and cross beams are laid across them. This method enables the work in a suspended state to be done as safely as on the ground.

3. Division of concrete arch into precast blocks

After the ordinary design of the concrete arch bridge is over, the arch is split into several strips of arch and, moreover, each strip is divided into

proper number of precast concrete blocks. The authors call the strip of arch " arch ring strip " for convenience. In the case when the arch ring strips are formed by assembling the blocks, the crookedness of it inevitablly results and it must be adjusted, so the portion of arch crown and the joint parts between the arch and spandrel walls are of cast-in-place concrete.

Splitting of the arch must be done in order that the arch ring strip formerly finished can sustain those which are built up later at both sides of it. And the proper size of the blocks are determined by considering the capacity of carrying equipments.

For the connections between blocks, the method of using lap joints of steel bars or post-tensioning method has been tried and obtained good results. Further investigation is being continued.

4. An outline of the erection method of the bridge

Main steps of the works in the construction of a prefabricated concrete arch bridge is explained as follows.

(1) At first, the PCT is designed and framed. At that time, it is necessary to calculate the most suitable amount of pretension and to determine the proper vertical position of cross beams so as to be laid along the lower surface of the designed arch.

(2) In the case of the two hinged arch, hinges are placed for both ends of the arch.

(3) Erection of the arch portion begins. Firstly, the blocks for an arch ring strip are built up. After the coockedness of it is adjusted, cast-in-place concrete for the part of arch crown is placed. The authors call this firstly made strip as " the fundamental arch ring strip " (just fundamental strip in brief). This work must be done as precisely as possible, or the works followed will become very hard. When the fundamental arch ring strip is built up and becomes to be supported by itself, the two strips made later at both sides can be sustained by the former one. Therefore, in this state, the PCT does not bear any load of the blocks and only play as falsework.

(4) The erection works of other arch ring strips progress in order, as they are sustained by previously built up arch ring strips.

(5) All the arch ring strips are built up and cast-in-place concrete is poured.

(6) After spandrel walls are set up and the floor slabs of bridge are placed, the pavement work begins. Thus a prefabricated concrete arch bridge is completed.

5. Basic Experiment

5.1 Design of Model Arch Bridge

The authors firstly attempted to build up a small scale model arch bridge such as a footbridge. The design conditions were as follows.

Type of arch:two hinged arch. Span:8.00m. Rise:1.20m. Width:0.80m. Load: uniform live load, 350kg/m^2.

The shape and dimensions of the model bridge designed under the conditions mentioned above are shown in Fig.1. Then, the arch of this bridge was split into four arch ring strips and each of them was divided into seven blocks. In this model, the block connecting method which mentioned before was not used, but the both ends of the each block were shaped into angles as shown in Fig.1. And, at

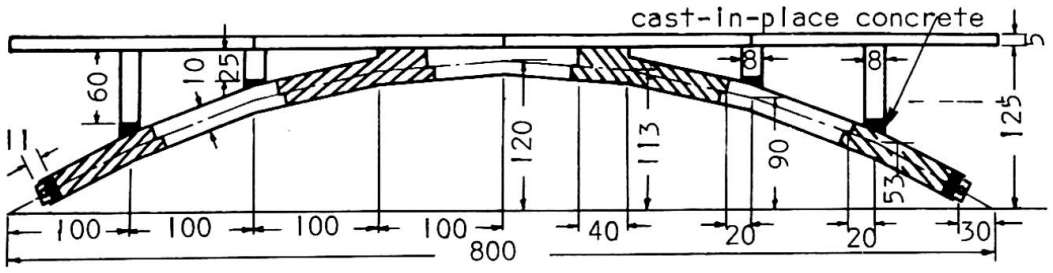

Fig.1 Model Arch Bridge unit: cm

our convenience, cast-in-place concrete were not used for the portions of the arch crown, but at both ends of the arch. For spandrel walls, four of them were as long as they could be precast, but those near the arch crown were included in the crown blocks themselves as one body. For the bridge floar, only PC precast slabs (5cm x 20cm x 200cm) were used and just placed over the spandrel walls.

5.2 Manufacture of the Precast Blocks

The blocks were of reinforced light weight concrete and each of them weighed about 40kg. After assembling the form of an arch ring strip, concrete was firstly poured into the shaded portions and secondarily into the unshaded portions after three days as shown in Fig.1. At that time, the surface of hardened concrete at the joint parts was used as a part of forms for fresh concrete of adjacent elements. Thus, the crookedness of the joints in the erection works of the arch was avoided.

5.3 PCT used for Erection Works

Fig.2 shows the shape and dimensions of the PCT used for the erection works. A pretension of 200kg was introduced into each hanger, consequently, 2000kg of horizontal tension was induced in each main cable. The vertical positions of cross beams were determined that which dropped within the range of 5cm 10cm under the lower surface of the arch, and vertically adjustable supports for the blocks were attached above to each cross beams. (Fig.3)

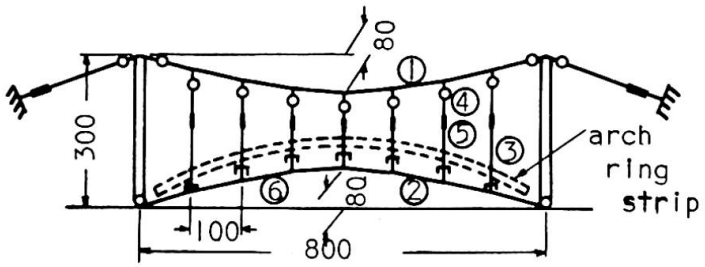

unit: cm

Fig.2 Pretensioned Cable Truss

5.4 Measurements during Assembling Work of Fundamental Arch Ring Strip

Various measurements were carried out for three different cases.

(a) The blocks of arch ring strip were put on the PCT from one end to the other in order, with connecting the joints.

(b) The blocks were put on the PCT from both ends to the crown in order, with connecting the joints.

(c) The blocks were put in the same way as in (b), but the joints were not connected during the work and were connected after the work was over.

For this experiment, the usual connecting method was not used, so an improvised connection was done as shown in Fig.4. Namely, by using transverse bolts, steel channels were attached tightly to both lateral sides of each block, then prestress was introduced into the joint by using the longitudinal bolts,

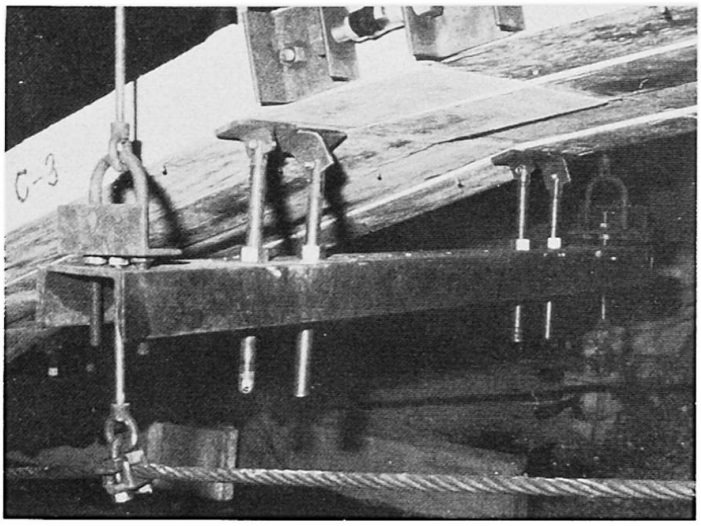

Fig.3 Supports for Precast Blocks

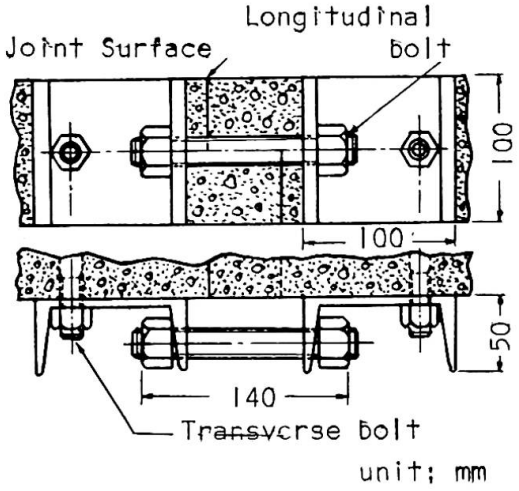

Fig.4 Improvised Connection

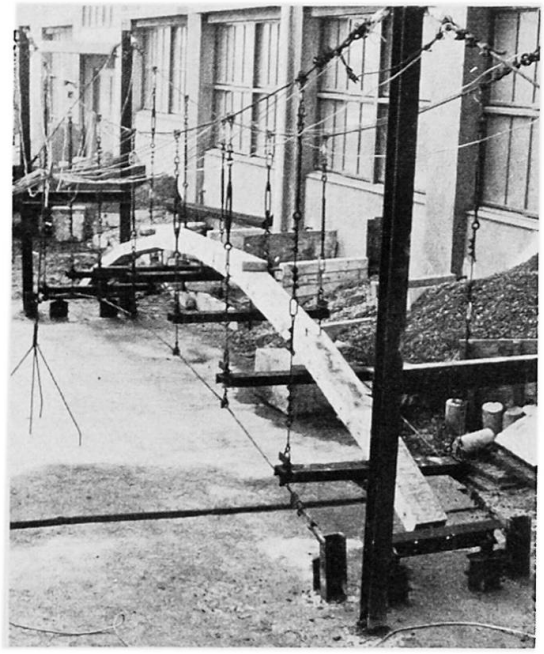

Fig.5 Fundamental Arch Ring Strip

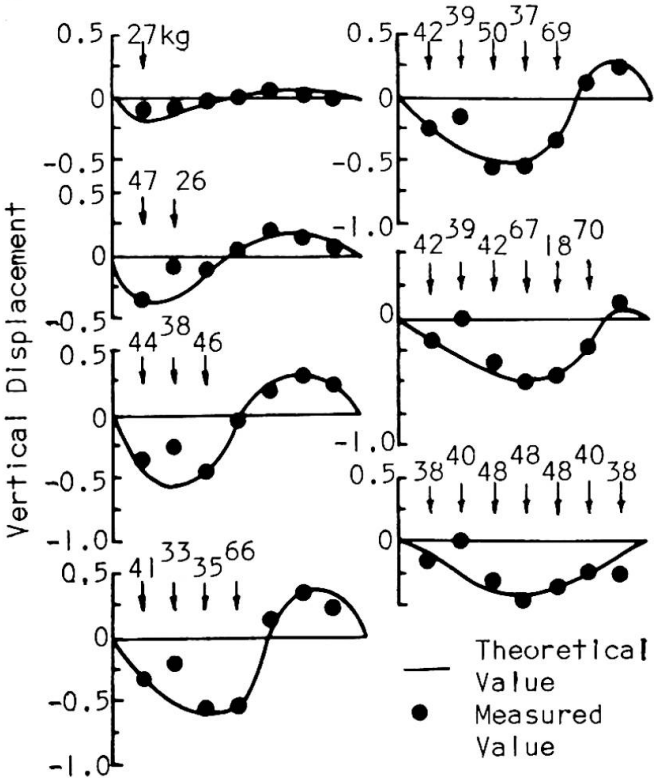

Fig.6 Vertical Displacement of Cross Beam (a)

consequently, the connected joints could be expected. Fig.5 shows a state when assembling work of the fundamental strip had just finished. Vertical displacements of cross beams in each case are shown as in Fig.6,7. In case of (a) (Fig.6), the value of maximum displacement is found about twice as large as in other cases (Fig.7). Therefore, the croockedness of the fundamental strip resulted easily in this case, and moreover, this work was comparatively difficult. Let us compare the cases (b) and (c). In Fig.7, measured values in the (c) case are nearer to the theoretical values than that of (b) case. The authors consider that the reason of this is as follows. In the (c) case, each block was only put on the PCT, but in the (b) case connected blocks played as a continuous curved beam during the work, which is undesirable because a compressive member of the arch will be subjected inevitably to not so small tensile stress during the erection works even

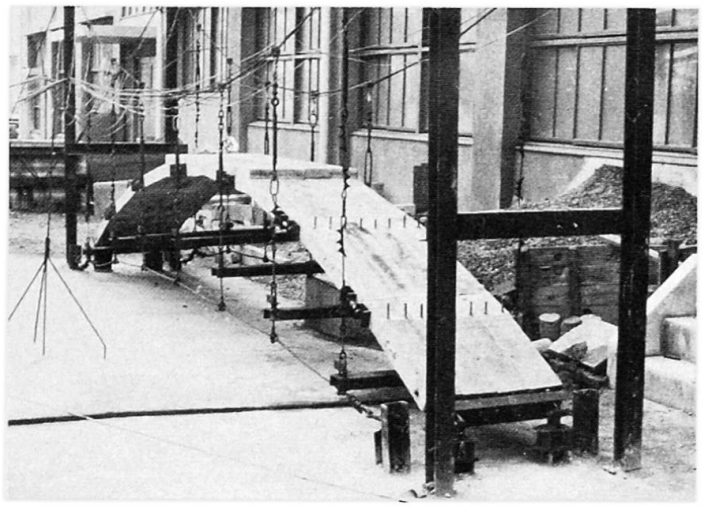

Fig.8 Whole Arch

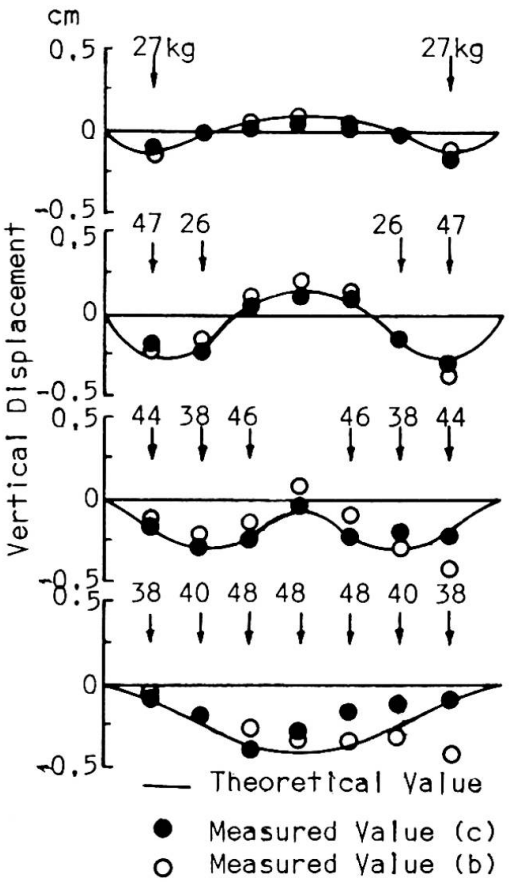

Fig.7 Vertical Displacement of Cross Beam (b), (c)

temporarily. From these measurements, the (c) case is recommendable for the assembling method of the fundamental strip.

5.5 Built up Work of the Model Arch Bridge

After the investigation on the assembling work of the fundamental strip had been over, other strips, the blocks of which were sustained by adjacent strip, were built beside previous one. Fig.8 shows the whole arch built up in this way. Cast-in-place concrete was made, the spandrel walls were set up and the PC slabs were placed over the spandrel walls. Finally the construction of this arch bridge was completed (Fig.9).

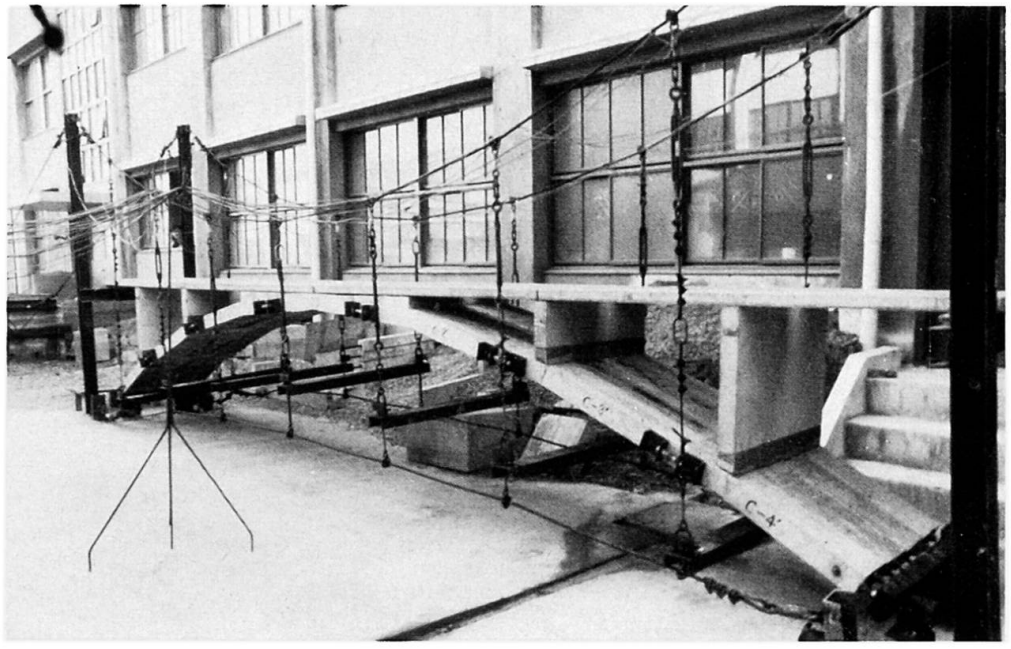

Fig.9 Model Prefablicated Concrete Arch

6. Conclusions

In this method, the PCT is used for the construction of a prefabricated concrete arch bridge and its key point is just in the assembling works of the fundamental strip. If this work is done precisely, the other arch ring strips can be easily erected, as they are sustained by the previously built up one. As the results of the basic experiment, it was made clear that the fundamental strip had better be put from both ends towards the crown in order and be connected each other afterward.

Although there may be some probrems to be solved, the authors believe that this method will be applied practically in the near future.

References

(1) A.Watanabe, T.Idemitsu, T.Ogami, K.Iida: Studies on the Safety Erection Method of Bridge by Composing the Pretensioned Cable Truss. Proceedings of the Japan Society of Civil Engineers, No.153, 1968

(2) T.Idemitsu, A.Utsumi: Large Deformation Method for the PCT System. Bulletin of the Kyushu Institute of Technology, No.27, 1973

SUMMARY

The authors have been working on the "Pretensioned Cable Truss" since about ten years ago. It has been made clear that wind resistance of the PCT is excellent and its displacement with live load is comparatively small. These characteristics are useful for the erection of bridges: a prefabricated concrete arch bridge was therefore built using the PCT. The results of this basic experiment seem to allow a practical application in the near future.

RESUME

Les auteurs étudient un système porteur de câbles tendus depuis près de dix ans. Le résultat montre une très bonne résistance au vent du système et son déplacement dû à la charge de trafic est relativement petit. Ces caractéristique sont favorables pour l'érection de ponts. Un pont en arc en béton a donc été réalisé avec un système porteur de câbles tendus. Le résultat de cette expérience fondamentale semble promettre une application pratique dans un proche avenir.

ZUSAMMENFASSUNG

Die Verfasser arbeiten seit zehn Jahren an der Entwicklung vorgespannter Kabelträger. Es hat sich ergeben, dass derartige Systeme einen grossen Widerstand gegen Wind haben, und dass Verformungen aus Verkehrslasten sehr klein sind. Diese Eigenschaften erlauben eine Anwendung beim Bau von Brücken. Eine versuchsweise Ueberprüfung dieses Systems eröffnet einen baldigen praktischen Einsatz.

VI c

Utilisations nouvelles, comprenant les constructions sous-marines et flottantes

Neue Anwendungen einschliesslich Unterwasserbauten und schwimmende Konstruktionen

New Applications including submerged and floating Structures

Leere Seite
Blank page
Page vide

Precast Pretensioned Girder Bridges with Continuous Situ-cast Decks and Diaphragms

Ponts à poutres précontraintes d'éléments préfabriqués avec tablier continu et diaphragmes coulés sur place

Vorgespannte, vorfabrizierte Balkenbrücken mit an Ort hergestellten durchlaufenden Fahrbahnplatten und Querträgern

KIYOSHI OKADA
Professor of Civil Engineering
Kyoto University
Kyoto, Japan

AZUMA OHURA
Engineer
Hanshin Express Public Corporation
Osaka, Japan

SEIJI HOSAKA
Engineer
Oriental Concrete Co. Ltd.
Osaka, Japan

1. Introduction

Utilization of simply supported precast pretensioned girder bridges in Japan started about in 1955. Since then a large number of this kind of the bridges with about 20m-spans or less have been constructed.

In highways the precast girder bridges were used relatively large in number in the early days, but it was found that many expansion joints were not desirable for riding quality and smooth passage of vehicle, in addition to difficulties of assuring good maintenance of highways. Therefore instead of precast girders the situ-cast continuous bridges have been often employed. But recently precast girders have been again approved more excellent with respect to productivity and quality control. And the method has been developed which enables to construct continuous girder bridges with precast members by casting in situ the decks and diaphragms over intermediate piers.

Thus, in planning multi-span viaducts of about 20m-spans in the urban areas, priority is now usually given to this type of bridges.

This paper reports how to connect precast girders over intermediate piers, the design concept and the flexural test results.

2. Construction method of girder connection for continuity

In Japan there are the standardized precast pretensioned beams available for simply supported beam bridges. The cross section of beam with, say, about 20m-spans is shown in Fig.1. And the bridge is composed of the beams placed in position at spacing of 1.05m and prestressed transverselly through the diaphragms and slabs.

In connecting the precast beams the similar method is used.

Details of the method are as fol-

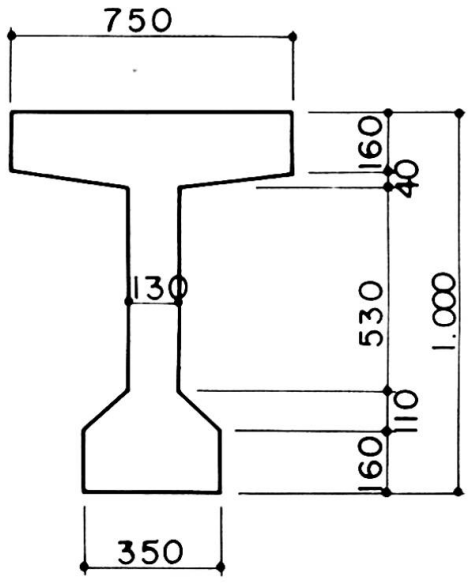

Fig.1 Typical cross section

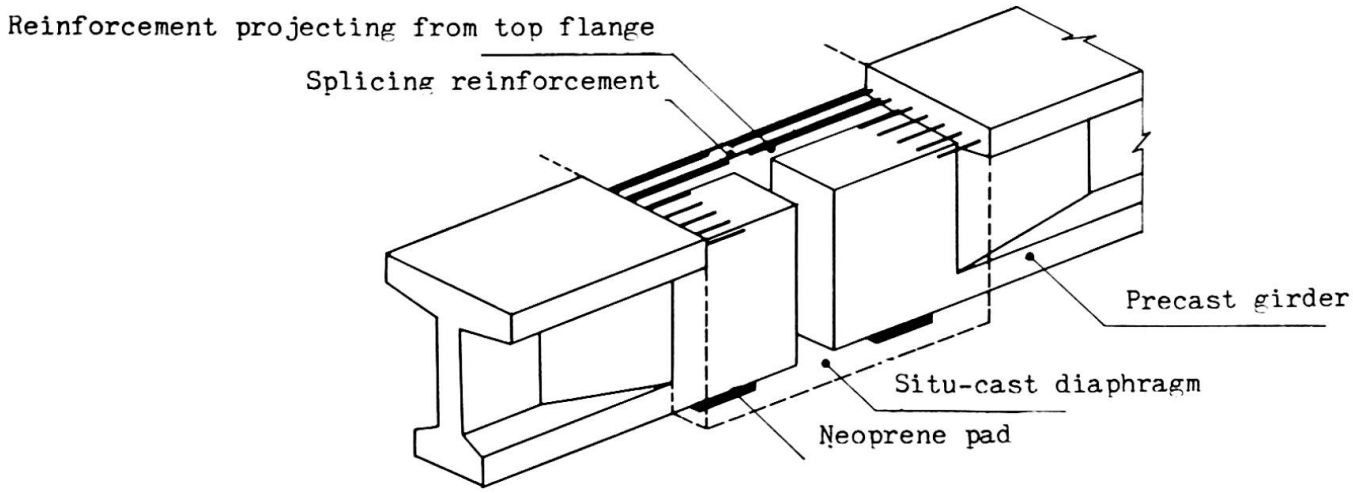

Fig.2 Schematic view of continuity zone

lows; The end of precast girders is designed as schematically shown in Fig.2. Continuity reinforcements are arranged longitudinally in the upper flanges of precast girders and along the projecting length the additional splicing reinforcements are lapped. Then concrete is placed in situ into fairly massive diaphragms including both ends of the precast girders. Then by using lateral prestressing steels provided in the diaphragms the adequate prestress is transferred to the connection zone.

The bearing shoes used temporarily for precast girders remain left behind in order to serve for the continuous girders when the connection has been completed. Therefore there exists a pair of shoes located slightly apart on each pier top.

3. Design concept on continuity

The amount of continuity reinforcement over piers may be not always enough compared to that of conventional continuous girders, because , as described before, the reinforcement for continuity are placed only in top flanges.

The zone of continuity tends to crack at lower load level than the other zones do and so it can be said that the former has the lower flexural rigidity. It is considered better to analyse this type of bridge as a group of simply supported beams, even though it behaves almost as continuous girder. In this respect it is different from conventional continuous girder.

A pair of bearing shoes are used by taking into consideration the fact that the connection zone can be constructed with more ease and that the safety of bridge could be assured even if the continuity of girder is completely lost. And a pair of bearing shoes, which is usually specified to use neoprene, is expected to work together alike one shoe because of their elastic deformation in vertical direction. It is found desirable by the analysis that the intensity of elastic constant of neoprene pads is less than 350 t/cm. This condition may be always satisfied when the pads are designed conventionally to correspond to the reactions and deformations of simply supported beams. The amount of continuity reinforcement that carries the loads (dead loads such as pavement and handrails, and live loads) imposed on the bridges after the completion of continuity, is calculated by the conventional reinforced concrete theory on the assumption that there exists only one bearing shoe on each pier top.

Generally, in case of spans about 20m long, deformed reinforcing bars of 22 mm dia. are placed at spacing of 10cm, so that the calculated stress of bars is

less than 1600 kg/cm^2.

It is expected that the secondary bending moment will take place due to creep of precast girders, resulting tensile stresses in the lower parts of girder sections in case of standardized precast girders. That is, it works to relieve the negative moment acting on the zone of continuity, and furthermore the secondary deformation due to creep is estimated to be less than the deformation of simply supported girders. Because of this reason the moment due to creep is not fully taken into consideration. However, some amount of reinforcement is provided in the lower part of the diaphragms in the direction of bridge axis in order to resist this creep moment.

Thus the precast pretensioned girder bridges with situ-cast continuity zone over piers constructed in this fashion is substantially of simply supported beam system, although progressively taking into consideration the incompleteness of continuity.

This system has both the advantage of simplisity in construction like simply supported beam system and the same good riding quality as assured in continuous beam system.

4. Test results

As described above, this system of bridge can be considered as continuous beam system from riding quality, even though it has incomplete continuity zone from view of design concept.

Consequently, the zone of continuity should have sufficient flexural rigidity so that pavement on both sides of it can be kept in good condition under service load.

A series of tests were carried out to make sure the point as indicated above. The main purpose of these tests is to observe how the test beams crack under service load or so, and to pursuit their behaviors until failure.

Three test beams prepared were 9m long with the same cross section, reinforcement and continuity zone at center of spans as those of actual beams. The method of bending test of beams is shown in Fig.3.

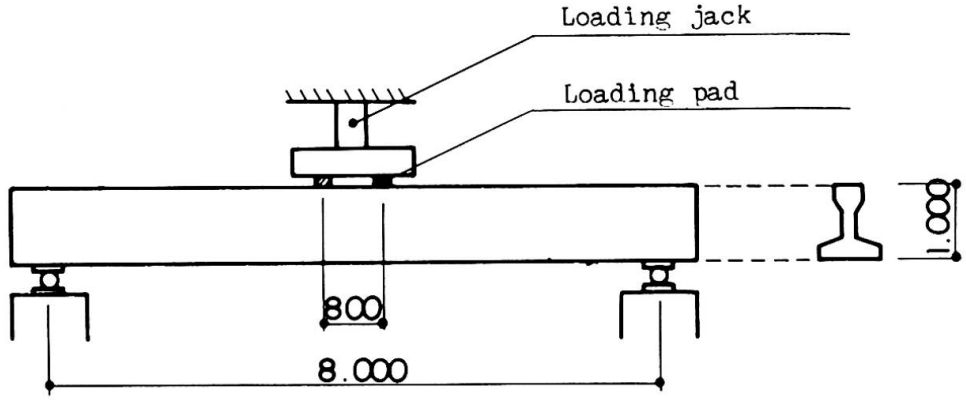

Fig.3 Loading method

The test results are as follows;

(1) Cracks were observed, firstly at both construction joints in decks, then in decks between both joints and finally in decks outside them. The load level at which cracks were observed at each stage were clearly different.

Now, the service load of the test beams is designated as P-1800, which means the load at which the stress of continuity reinforcement has reached 1800 kg/cm^2 as calculated by the conventional theory, while the allowable stress of reinforcement in actual beams is specified to 1600 kg/cm^2.

The initial crack at construction joints in top flanges occurred before the stress of reinforcement reached 1800 kg/cm^2. But the crack width remained almost unchanged thereafter, and at P-1800 the width was less than 0.1mm. At

P-3000 (the load at which the stress of reinforcement has reached the nominal yield stress 3000 kg/cm^2) the width was less than 0.2mm. In the zone between the two construction joints, no crack was found even at P-1800, and first crack occurred at the calculated stress level of 2000 to 2400 kg/cm^2.

Then the load was removed. When the beams were reloaded, the crack width in the zone between both construction joints was 0.1mm at P-1800, and became rapidly as large as 0.4mm at P-3000. This crack developed and caused the beams to fail finally as shown in Fig.4. Outside the both joints, there existed no crack before P-3000.

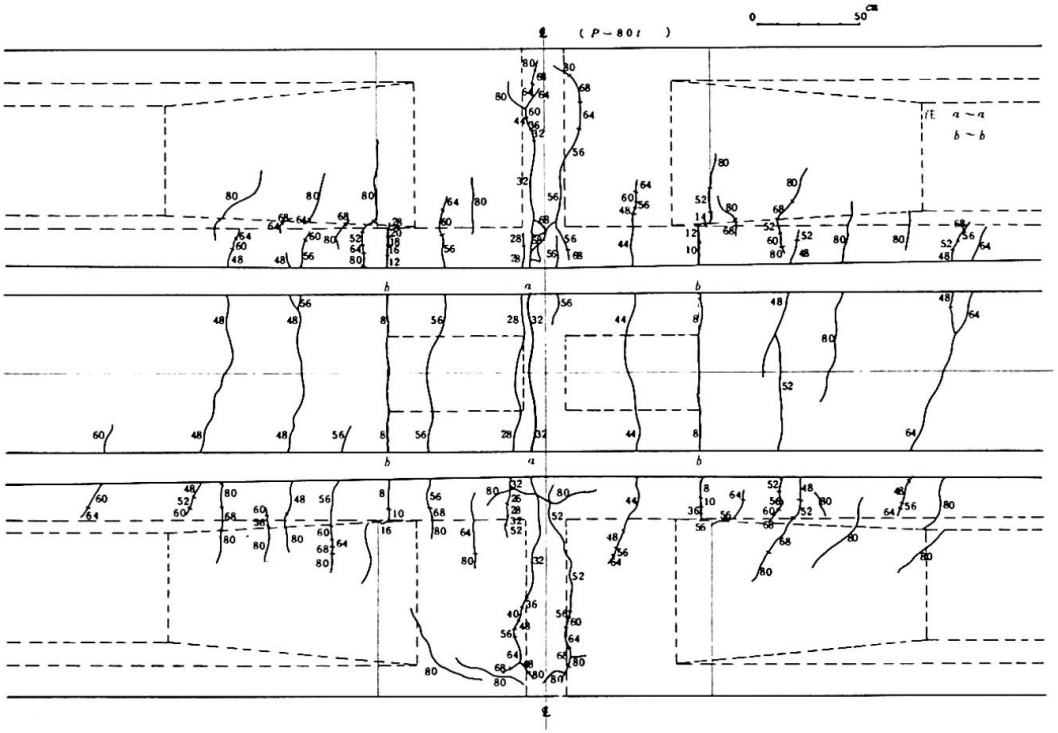

Fig.4 Typical final crack pattern

(2) The reduction in flexural rigidity at the zone of continuity as load increased was estimated by measuring deflections of test beams. The crack at construction joint in top flanges gives little influence on the flexural rigidity of beams. The flexural rigidity of test beams began to decrease after the cracks occurred in the middle part between both joints at the load higher than P-1800 as indicated in Fig.5. Until the test beams failed any slippage was not observed in the splicing reinforcement having lap lengths of over 30 times dia. each along the reinforcement projecting from top flange of girders.

The test beams failed due to excessive compression of top flange after the tip of crack between both joints had reached almost the top fiber. No abnormal behavior to be attributed to the performed continuity was observed throughout these tests.

The description above is the excerpts from the test results, which show that the zone of continuity does not give any worse influence on pavements at service load level and at the same time that not any special behavior were observed which might be resulted from the performed continuity. Consequently it is concluded that the precast girder bridge with this kind of the continuity works completely well.

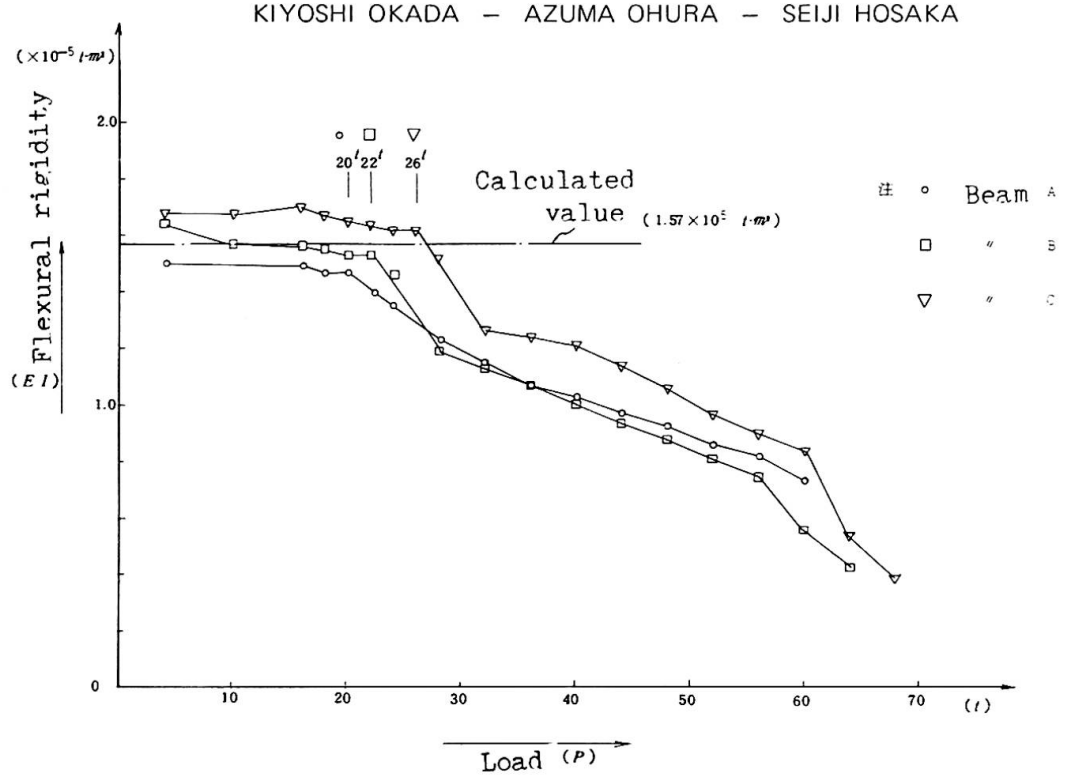

Fig.5 Reduction of flexural rigidity estimated by deflections measured

5. Remarks

A large number of viaducts have been constructed in urban areas in Japan. The engineers concerned must pay attention for the people living along the job sites to the shortening of construction periods and various pollution problems during construction.

From this point of view, the utilization of factory-made precast beams as reported here is to be approved to a large extent. The authors are happy if this report may give any help to the engineers concerned.

SUMMARY

The precast pretensioned girder bridges with continuous situ-cast decks and diaphragms over intermediate supports are the structures which behave actually as indeterminate continuous beams, but which are assumed to consist of determinate simply-supported beams with respect to structural analysis. Consequently they are completely different on this point from conventional continuous beam bridges. The method of girder connection for continuity, the design concept and the flexural test results are presented.

RESUME

Les ponts à poutres précontraintes d'éléments préfabriqués, avec tablier continu et diaphragmes coulés sur place sont des structures qui se comportent en fait comme des poutres continues indéterminées, mais qui sont considérées dans le calcul comme des poutres simples statiquement déterminées. En ce qui concerne l'analyse, ces ponts sont donc complètement différents des ponts conventionnels à poutres continues. La méthode d'assemblage des poutres pour assurer la continuité, la conception du projet et les résultats des essais de flexion sont présentés.

ZUSAMMENFASSUNG

Vorgespannte, vorgefertigte Balkenbrücken mit an Ort hergestellten durchlaufenden Fahrbahnplatten und Querträgern verhalten sich praktisch wie durchlaufende statisch unbestimmte Träger. In der Berechnung wird allerdings statisch bestimmte Lagerung als einfacher Balken vorausgesetzt. In dieser Beziehung unterscheiden sich solche Brücken demnach von normalen konventionell hergestellten Tragwerken. Die Verbindung der Balken über den Zwischenstützen, die grundlegenden Entwurfs-Gedanken sowie die Ergebnisse eines Biegeversuchs werden dargestellt.

Leere Seite
Blank page
Page vide

Precast Continuous Span Structures for Highway and Urban Bridges Made of Completely Prefabricated Segments

Poutres continues en béton armé pour les ponts routiers et urbains en voussoirs préfabriqués

Durchlaufende Stahlbetonüberbauten für Autobahn- und Stadtbrücken aus vorfabrizierten Fertigteilen

N.M. KOLOKHOLOV
Doctor of Technical Sciences

A.L. TSEITLIN
Master of Technical Sciences

CNIIS of the Ministry of Transport Construction
Moscow, USSR

A now developed continious span construction is an economical solution for multiple - span bridges and viaducts. with spans 21-63 m long. It is a precast, prestressed slab beam structure (abbr PRK) made of segments with maximum prefabrication. This construction is mounted span by span with a movable scaffold carrier.

There is a difference between slab-beam types of structure widely used abroad in continious in-situ constructions and precast ones.

Every PRK span consists of a number of composite segments laid out in length and covering the whole carriageway in width. PRK cross-section looks like two longitudinal bulky beams with their associated slabs above. This kind of structure is simple in shape, easy in fabrication, as the bulky beams are good for winding the cables and casting the concrete. At the ends of each segment there are cross stiffeners 50-60 cm high. (See Fig. 1,2). Such a design solution increased greatly the lateral rigidity of a segment necessary for three dimensional behaviour of the structure when in service, transportation and installation. It led to modification of the scheme of three-dimensional behaviour of a carriageway slab because now it is thinner and less voluminous in comparison with slab in in-situ constructions and here it behaves like a small span. The area of segments to be glued is extended. Therefore sticking is more secure.

All technological advantages of slab-beam cross-sections are inherent in PRK. But the PRK unlike analogical solutions in the west has better characteristics than typical multiple stiffened prestressed span structures in use due to positive features mensioned above.

PRK continious span consists of segments glued between each other and fastened by tendous running through ducts. Every span is nothing but a section, middle sections being of the same length as a span. One extreme section is shorter, the other longer than a span. Adjacent sections are coupled in-situ at a mean

distance from a pier equal to 0.2 length of the span and fixed with cables. For transportation of segments by rail ways their dimension in longitudinal plane is taken within 3 m. Their weight is to 45 t. The PRK is designed in such a way that makes it possible to fabricate segments of different width and height in one and the same formwork. But the space between main beams and the width of the middle slab are uniform. For different spans and carriageways the beam webs and slab cantilevers may differ.

The upper surface of segment slabs has a cross fall for drainage. Water-proof insulation may be laid down in shops. Under field conditions waterproofed is only glued joints. PRK types of segments are easy to apply in structures for crooked and skewed portions of highway.

All major operations as for fabricating PRK superstructure are made at works. The rate of prefabrication is about 98%. In-situ operations comprise:

concrete casting of section joints ;
epoxygluing of segment joints;
tension of high-strength cables;
paving with bituminous concrete and
laying down a part of water-proof insulation.

Continious superstructure is assembled span by span from one end of a bridge. A span structure is assembled section by section on the movable scaffold carrier (Fig.3).

As a rule scaffold carriers do not occupy the space under a bridge, because span structures repose on them by their lateral stiffeners.

Thanks to segment features one can use the positive gualities of carriers, when located underneath as well as more effectively glue segment joints, prestress the reinforcement and improve the interaction between span structure and movable scaffold carrier (Fig.2).

Main peculiarity of a movable scaffold carrier lies in the fact that the heavy transshipment crane necessary for assembling segments of the next section does not stand on it (Fig. 3). The segments within the next section are transported by rail on the upper strips of the scaffold carrier. That is the main difference between this crane carrier and movable carriers widely used abroad. It has a considerably less weight of metall per 1 m^3 of concrete of a deck.

The movable scaffold carrier looks like two metall girders made of high-strength steel. It consist of welded sections, each 21 t. of weight. On a construction site these sections are tied into a single structure with high-strength bolts. The scope of this carrier is to mount spans from 33 to 63 m long.

There are winches here for hauling segments.

On the launching nose there is a cart (load capacity 20 t) for erecting next pier. Inside and outside the girders there are special gangways adjusted up and down. Besides that there is a suspended cart with jacks for tensioning tendons. The scaffold carrier moves along a deck on special carriages fixed to permanent piers. Camber is regulated by rails.

Fig 3 illustrates schematic erection of a span structure. The scaffold carrier is assembled on the approaches to the bridge on one of its slopes and pushed forward into the first span.

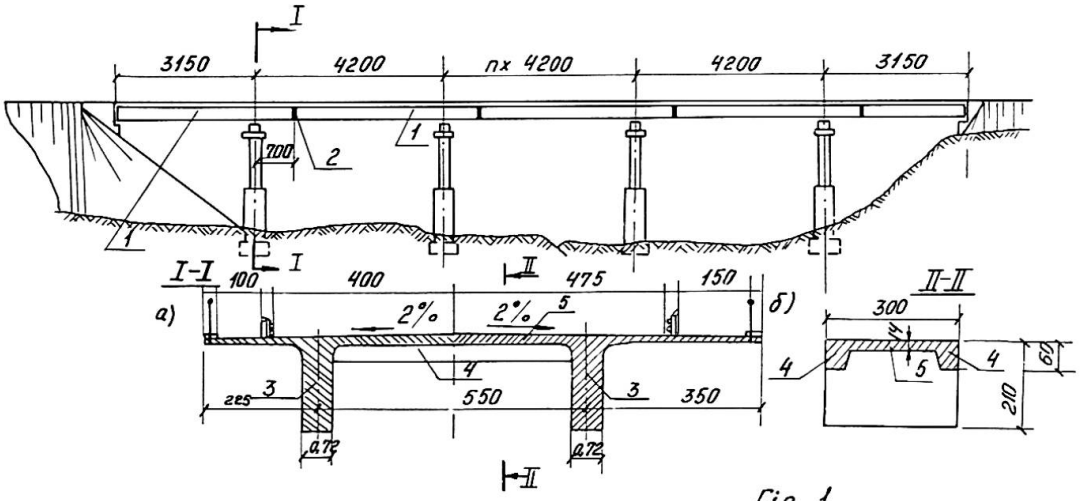

Fig 1

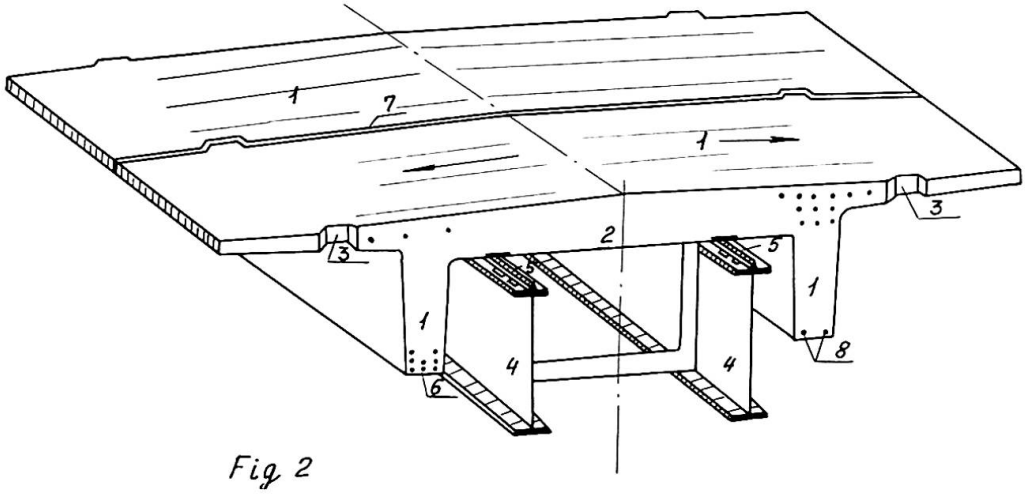

Fig 2

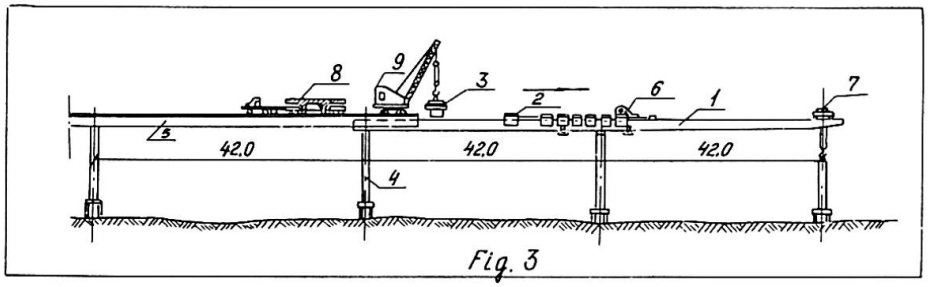

Fig. 3

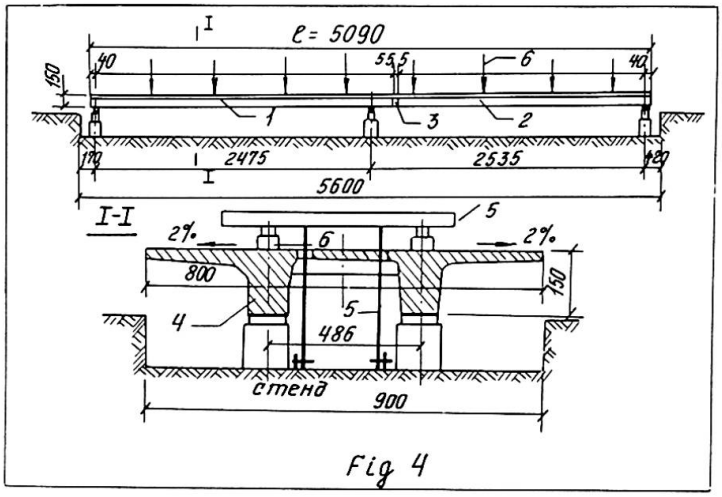

Fig 4

The scaffold carrier being in such position, the crane for hauling segments is installed at its front over the breast wall . The first available segment of span structure is transported on a trailer under a transshipment crane which then haults it on the rails. This done, the block is pulled along rail with the help of a winch in its design position. When all the segments of a span are assembled together on the carrier they are coupled and prestressed.

The section being completed, the scaffold carrier is descended and removed to the next span with hoisting jacks fixed on the piers. Next spans are assembled in the same way with the only difference that the transshipment crane in this case is installed on the outside panels of the assembled span.

A superstructure with spans 2x25 m was assembled on the special power test stand with the purpose of investigating and developing fabrication technology, transportation and assembly of continious construction of PRK type. Experimental slab-beam spans were made of segments of natural dimensions: length 2m, width 8 m, height 1.5 m. Weight of each block is 18.5 m.

Experimental deck was composed of two sections: 1st section of 15 blocks, 2nd section of 10. Blocks were fabricated by printing method and their production technology turned out to be very effective.

Their labour capacity happened to be lower than that of box beams. Transportation and mounting of experimental span structure. were made very successefully and with little labour expenditure.

The precast experimental span structures are supposed to be continued with static and pulse loads. Their stress-strain states at that are investigated at different stages until they are collapsed. (Fig.4).

Nowadays with the help of this method a bridge with spans 42x2x63+42 m is under construction and a number of other structures are scheduled to be erected.

SUMMARY - A new structure of a continuous span (abbr. PRK) is assembled on a movable scaffold carrier of original construction. An experimental continuous span with dimensions 2x25 m is tested under movable load on a specially designed test stand in order to examine the technology of fabrication and assembly and also to investigate the stress-strain state of the new construction.

RESUME - La structure nouvelle d'une poutre continue de pont (en abrégé PRK) est exécuté à l'aide d'un chariot d'étayage mobile de conception originale. Le poutre de 2x25 m de portée est sollicitée par une charge mobile en laboratoire, en vue d'élaborer une technologie de montage et d'étudier l'état contrainte-déformation de la structure nouvelle.

ZUSAMMENFASSUNG - Eine neue Methode, durchlaufende Ueberbauten von Brücken herzustellen, besteht in der Montage von Fertigteilen auf einen speziell entwickelten Gerüstwagen. Ein speziell hergestellter Versuchswagen dient dazu, Fertigungs- und Montagemethoden zu prüfen und den Spannungs-Verformungs-Zustand eines Versuchsträgers von 2x25 m Spannweite unter beweglichen Lasten zu ermitteln.

Industrialized Apartment Buildings Composed of Steel Frame and Precast Concrete Panels

Construction industrialisée d'appartements avec une ossature métallique et des panneaux préfabriqués en béton

Industriell hergestellte Wohnbauten, bestehend aus Stahlskelett und vorfabrizierten Deckenplatten

TOSHIHIKO HISADA
Dr. Eng. Director

TETSUYA SASAKI
Senior Research Engineer

Kajima Institute of Construction Technology, Kajima Corporation
Tokyo, Japan

1 PREFACE

In recent years in Japan, the convergence of the population into cities and their surrounding districts is remarkable. This has created the need for effective use of urban area and for increase in the number of housings. Consequently the development of the industrialized system for construction of tall apartment buildings are gaining demand. The research on the structural system of these buildings was carried out mainly from the aseismic point of view, because Japan is one of the worst earthquake countries in the world. Thus, the structural system composed of combined steel frame and precast concrete panels was newly developed, and group of apartment buildings 7 stories high, were constructed for the first time by this system in 1966. Thereafter this system and its variations have played the main roles for the construction of tall apartment buildings using industrialized process. Currently, the tallest example is 21 stories high (See Fig. 7), and the total number of dwellings constructed by these systems is roughly estimated to be about fifty thousand.

This paper deals with the structural characteristics of the apartment buildings constructed by said system on the basis of seismic tests and analyses, and also reference is made to some of the structural problems particular to these buildings.

2 STRUCTURAL SYSTEM

Fig. 1 shows the outline of the structural system of a 14 story apartment building on which structural researches were performed. In this building, lateral forces are resisted respectively by frame structures mainly composed of structural steel frame in longitudinal direction and by seismic shear walls in transversal direction. The strong axis of the H shaped steel columns are arranged in longitudinal direction of the building so as to resist the lateral force effectively.

In course of the construction, steel columns prefabricated to 3 stories length are erected. Next, steel beams encased in concrete with or without curtain walls and precast concrete shear walls embracing steel tie beams or tie plates at the top are jointed to the steel columns respectively in longitudinal

and transversal directions, and then precast concrete floor slabs are laid on the beams and walls. After reinforcing and forming of the columns, concrete is then placed.

Steel beams are connected to steel columns by welding and bolting as shown in Fig. 2. Precast shear walls are jointed by bolting, welding and shear connectors. Precast shear walls with steel braces and concrete floor slabs poured at the site are applied in some cases.

A revised system was developed recently in which considerable portion of the seismic forces in logitudinal direction of the building is resisted by reinforced concrete, and consequently several tall apartment buildings were constructed by this system which was successful in saving considerable construction costs. (See Fig. 3)

3 METHOD OF ASEISMIC DESIGN

Seismic forces prescribed by the Japanese Building code were used for the aseismic design of these buildings. Structural members were determined by the Structural Standard of Architectural Institute of Japan. In longitudinal direction of the building, the structural design of steel frame was made to resist the bending and shear, while reinforced concrete of the columns was designed to carry the axial forces. In transversal direction of the building shear walls ware designed to resist the seismic force and the columns on both sides of the walls were designed to resist the over-turning of the building. As for the new type joints, load tests on joint specimens were performed and the allowable strength of the joints were properly determined from test results.

Because the structural system was a new development, load tests of the structural specimens including main connectors and joints were carried out to confirm the structural characteristics of the building, and the test results were fed back into the structural design. Observation of the dynamic behavior of the building was made by forced vibration tests. Finally, the aseismic safety of the building was confirmed through earthquake response analyses based on the test results.

4 STRUCTURAL TESTS

Static load tests of the structural specimens were performed to investigate the aseismic characteristics of the building shown in Fig. 1.

(1) Structural characteristics of the shear wall structure

A shear wall specimen of reduced 1/2 scale was prepared for the load test. The specimen represented two stories of the shear wall structure in transversal direction of the building. The shear wall of one story was composed of two precast concrete panels and a steel tie beam was provided at each floor level. The joints of the panels were formed with a combination of shear keys of concrete and stud dowels. The specimen was fixed to the testing floor at the bottom of the columns, and repeated lateral forces were applied alternately to the specimen at each floor level.

Fig. 4 shows the relation between the average shear stress and the shear deformation of the lower wall. The maximum strength of the specimen was 3.8 times as large as the design load and the joints possesed adequate strength and stiffness throughout the test. The deformation of the specimen at the maximum shear stress was about 4×10^{-3} rad..

(2) Structural characteristics of the frame structure

The load tests on the specimen of reduced 1/2 scale, which represented a two span-two stories unit frame with curtain walls, were performed to investigate the structural characteristics of the structure in longitudinal direction

of the building. The repeated lateral forces were applied alternately to the ends of the columns of the specimen which was supported at the ends of the beams. Fig. 5 shows the load-deflection curve of the specimen. From this figure the following remarks can be obtained:

a. The curve showed stable and ductile characteristics which were caused by the yielding in bending at the ends of steel beams. The residual displacements of the specimen caused by 1.5 times design load or less were very small.

b. The maximum strength of the specimen was 2 times or more of the design load and its stiffness was considerably large.

c. The stiffness of the specimen as calculated on the assumption that wing walls and column behave as one body coincided fairly well with the observed one.

5 VIBRATION TESTS AND ANALYSIS

The building shown in Fig. 1 is supported on drilled steel piles at average depth of about 25 meters below ground level in the relatively soft layers of clay and sand. The bearing capacity of the soil and the length of the piles beneath the basement vary considerably according to location.

The dynamic properties of the building were investigated by forced vibration tests using a vibrator. The test results are shown at the top of Table 1 and in Fig. 6. It is observed from Fig. 6 that transversal vibration characterized by the deformation of the shear walls and floor slabs in their planes was created. In the fundamental translational vibration in transversal direction of the building, the ratio of displacement at the top of the building caused by the swaying and rocking motion was 66%. In contrast with this, the vibration of the structure in longitudinal direction was of typical shearing type.

Considering the dynamic characteristics observed from the vibration tests, dynamic analysis in transversal direction of the building was performed of a two dimensional structural model characterized by the correlated stiffness matrix of shear wall and floor slab in their planes and supported on the base with the conditions obtained from the tests. The analyses were in good correlation to the observed results as shown in Fig. 6.

The vibration test results of buildings of the same type structure are also summarized in Table 1. The following remarks may be derived from these test results:

a. The displacement due to rocking and swaying motions of the building was predominant in transversal displacement at the top of the building, especially in buildings supported by long piles driven in the soft layers of soil. In these cases the proportion of above mentioned displacement in total reached about 70 percent in maximum.

b. Fundamental natural periods of buildings 30 meters high were distributed in the range of 0.5 to 0.65 sec. in transversal direction, and 0.3 to 0.75 sec. in longitudinal direction respectively. The wide range variation of the latter periods may be attributed to the variety of types of the curtain walls fixed to the structural frames.

c. It should be noted that the period of torsional vibration (fundamental vibration of floor slabs) of slender buildings are close to the fundamental period of translational vibration of shear walls (fundamental translational vibration) and that the period of the vibration of the floor slabs in their planes (secondary vibration of floor slabs) was over 0.2 sec..

d. As for the relationship between natural periods and damping factors, it was observed that the damping becomes larger with the decrease of the period.

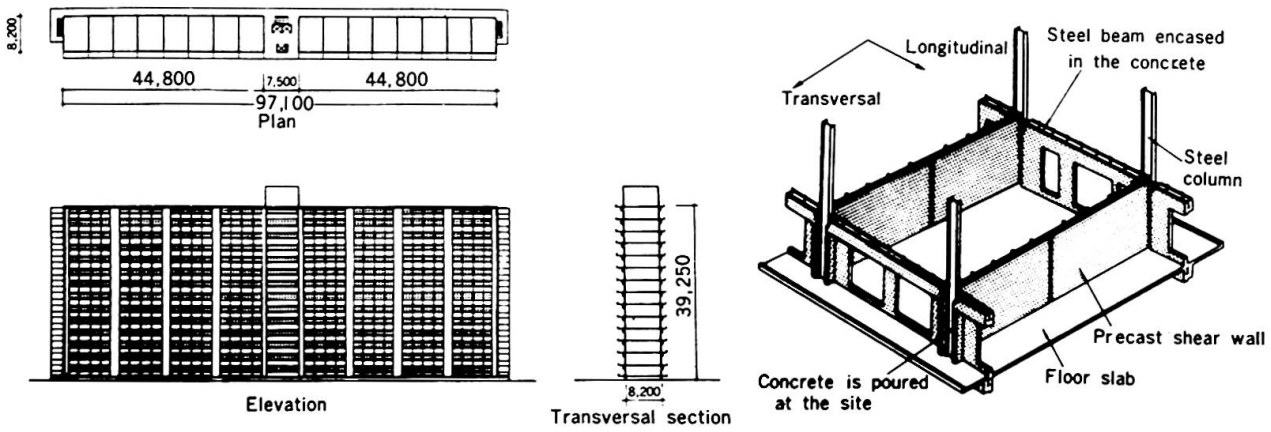

Fig. 1 Outline of a 14 story apartment building and its basic structural system

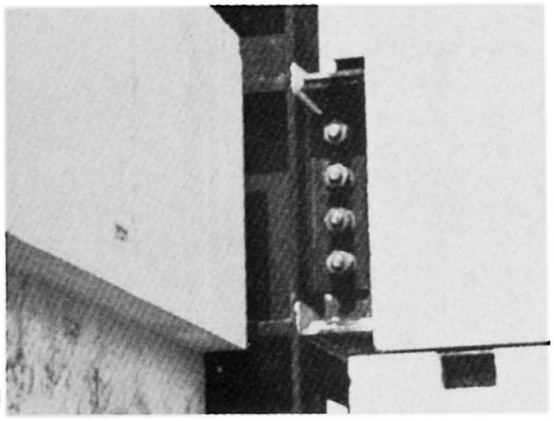

Fig. 2 Beam-column connection

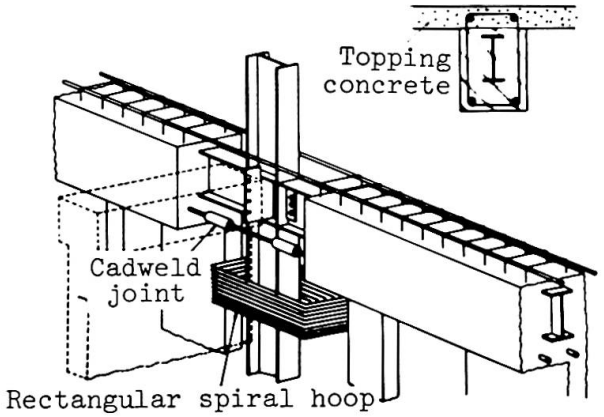

Fig. 3 Revised structural system

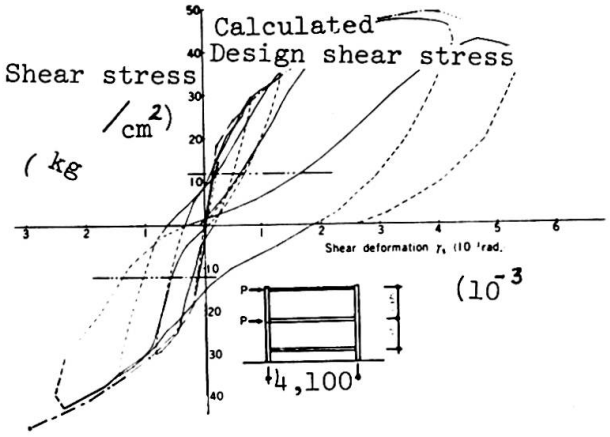

Fig. 4 Shear stress-shear deformation curve of shear wall specimen

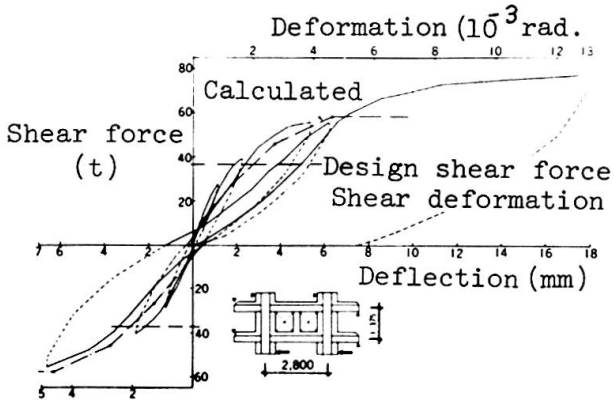

Fig. 5 Load-deflection curve of frame specimen

Table 1 Vibration test results

Bulg.	Dimension of building				Period (s) & damping factor (%)						Supporting	Proportion of sway & rocking
	Width	Height		Length	Transversal				Longitudinal			
	(m)	(m)	(Story)	(m)	Translational 1st	Translational 2nd	Floor slab 1st	Floor slab 2nd	1st	2nd		
(a)	8.2	38.5	14	102.8	0.66 2.0	—	0.55 1.7	0.28 1.4	0.46 3.0	0.15 12.0	25m Steel pile	66%
(b)	8.5	29.6	11	92.7	0.48 2.0	—	0.43 1.7	0.25 2.5	0.31 3.7	0.11 —	17m Steel pile	50% or more
(c)	7.8	30.1	11	78.0	0.59 2.4	0.075 7.1	0.51 2.9	0.22 4.5	0.44 4.4	0.073 3.6	30m Steel pile	70%
(d)	10.74	30.5	11	59.4	0.54 2.2	0.095 4.8	0.54 2.2	0.22 3.9	0.74 2.2	0.21 8.4	Loam	50%
(e)	17.88	61.6	21	52.0	0.85 1.4	0.20 5.7	0.69 1.3	0.11 6.5	0.66 1.6	0.22 5.5	11m Concrete pile	25%
(f)	20.0	29.7	11	129.6	0.62 3.0	—	0.59 2.5	0.41 3.5	0.47 —	0.133 3.5	40m Steel pile	68%
(g)	7.79	29.7	11	80.4	0.59 1.9	—	0.54 1.7	0.21 2.9	0.76 1.2	0.28 2.5	25m Steel pile	67%

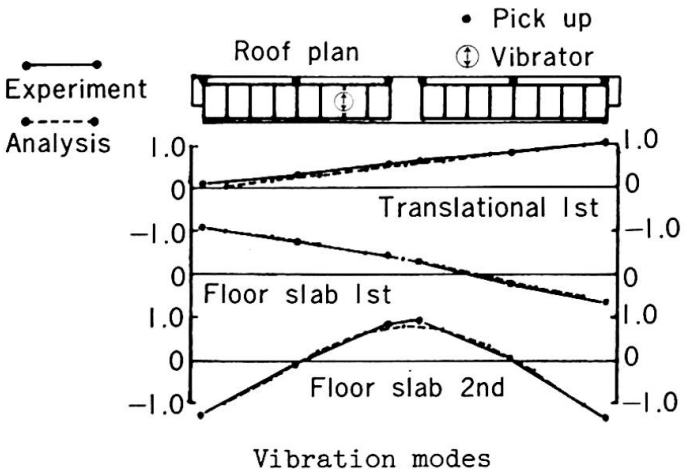

Fig. 6 Results of experiments and analyses on the vibration of the building in transversal direction



Fig. 7 A tall apartment building constructed by the industrialized system

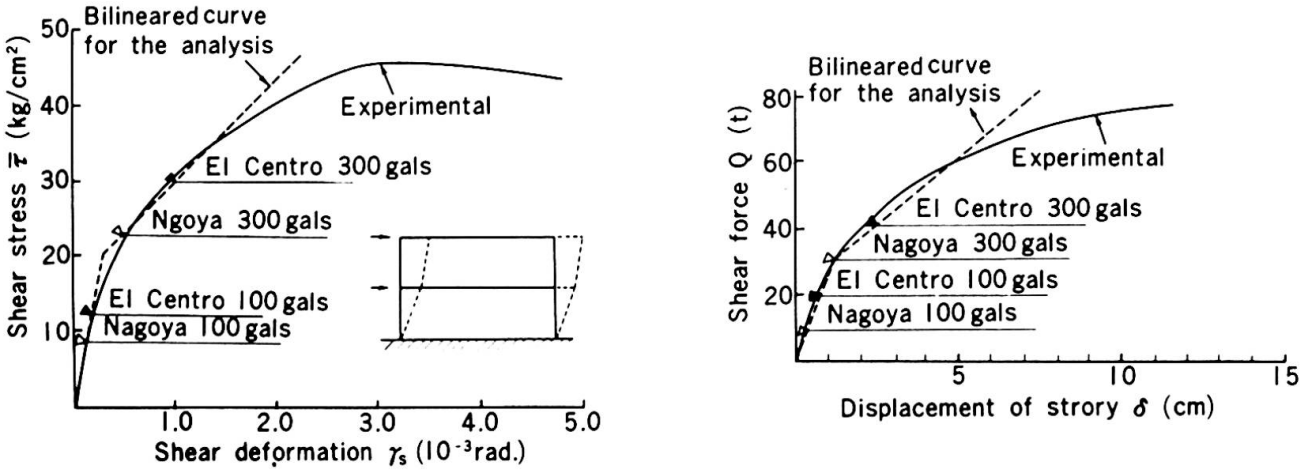

Fig. 8 Results of earthquake response analyses

6 EARTHQUAKE RESPONSE ANALYSIS

The earthquake response analyses of the building shown in Fig. 1 were made to confirm its aseismic safety. In transversal direction, a unit (1 span) of the building was treated as a flexural and shearing vibration model consisting of 14 lumped masses with rocking and swaying motion at the base. In this model, its flexure was assumed to be elastic and its shear to be bilinear. These properties were determined from the test result of the shear wall specimen. In longitudinal direction, the same unit was treated as a shearing vibration model fixed at the base. Bilineared characteristics of the model in shear were determined from the test results of frame specimens. In the analyses 5 % dumping factor was used, and El Centro and Nagoya earthquake accelerograms with modified maximum intensity of 100 gals and 300 gals each were applied to the models as the imput earthquake motions.

The results of analyses are shown in Fig. 8, in which the maximum response shear forces are marked on the load-deflection curves used in the analyses. It is considered that the superstructure of the building has sufficient earthquake resistance in both longitudinal and transversal directions.

7 CONCLUSIONS

From the tests and analyses mentioned herein, the tall apartment buildings constructed by the systems composed of steel frame and precast concrete panels are considered to have adequate aseismic safety. In other words, these buildings are considered safe from destructive damage which might result in loss of human lives during severest earthquakes, provided that the joints of the prefabricated structural members are normally constructed.

It is desired that further investigations will be performed on the seismic analysis method for the total structure which consists of superstructure, foundations, soils and piles, and that the data for more reasonable evaluation of aseismic safety of such buildings will be accumulated.

The authors wish to thank Dr. K. Muto for his leadership on this research and developement and Messrs. T. Tsugawa, S. Bessho and K. Ishii, Research Engineers of the Kajima Institute of Construction Technology, for their collaboration in the tests and analysis reported herein.

SUMMARY

An industrialized structural system for tall apartment buildings which consists of steel frame and precast concrete panels was developed in Japan in 1966. Thereafter, many apartment buildings have been constructed by this system and its variations. This paper deals with load tests of structural specimens, earthquake response analyses and vibration tests of the apartment buildings constructed by this system and also refers to some structural problems which are particular to these buildings.

RESUME

Un système de construction pour les habitations de grande hauteur a été développé au Japon en 1966, à partir d'une ossature métallique et de panneaux en béton préfabriqués. De nombreux bâtiments ont été réalisés avec ce système et ses variantes. Des essais de charge sur spécimens, une analyse du comportement sismique, et des mesures de vibration ont été réalisés sur des bâtiments de ce type. Quelques problèmes particuliers propres au système sont ensuite exposés.

ZUSAMMENFASSUNG

Ein Baukastensystem für Wohnhochhäuser, bestehend aus Stahlrahmen und vorfabrizierten Deckenplatten wurde 1966 in Japan entwickelt. Seither wurden viele Bauwerke nach diesem Verfahren erstellt. Hier wird über verschiedene Versuche an Bauelementen, über das Tragverhalten bei Erdbeben, über das Schwingungsverhalten sowie über weitere, für das Bausystem typische Probleme berichtet.

The Tokyo Port Tunnel

Le tunnel du port de Tokyo

Der Tunnel unter dem Hafen von Tokio

YASUHIRO KIMURA
Head, Bay Shore Route Construction Bureau
Metropolitan Expressway Public Corporation
Tokyo, Japan

1. Introduction

The Tokyo Port Tunnel, a submerged tunnel to which dynamic response analysis and other new technical devices were applied, is located at the First channel of the Port of Tokyo. The tunnel is 1,035m long and the ventilation buildings with cast-in-place tunnels together is 290m. The total length of the cross-tunnel is thus 1,325m. The undersea tunnel consists of 9 prefablicated reinforced concrete elements, each 115m long, 37.5m wide, 8.8m high, as shown in Fig. 1. The ventilation tower measures 48m in height above the ground and 25m in depth underground. The horizontal section is a square shape of about 40m. The soil condition at the construction site is shown in Fig. 2. The surface layer is 43m deep at the west land part, 28m at the sea-bottom and 49m at the east land part.

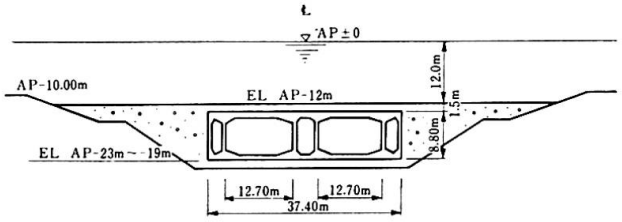

Fig-1 Standard cross section of Tokyo Port Tunnel

2. Earthquake response analysis and earthquake resistant design.

The predominant period of the ground inferred from the results of micro-tremor observation and empirical prospecting is 1.6 sec at the west side, 1.0 sec at the sea-bottom part and 1.8 sec at the east land part, as for the surface layer above Tokyo Gravel layer (base layer, GL-40m ~ -50m). The major part of the surface layer is composed of a very soft clayey soil having an N-value of 0 to 5.

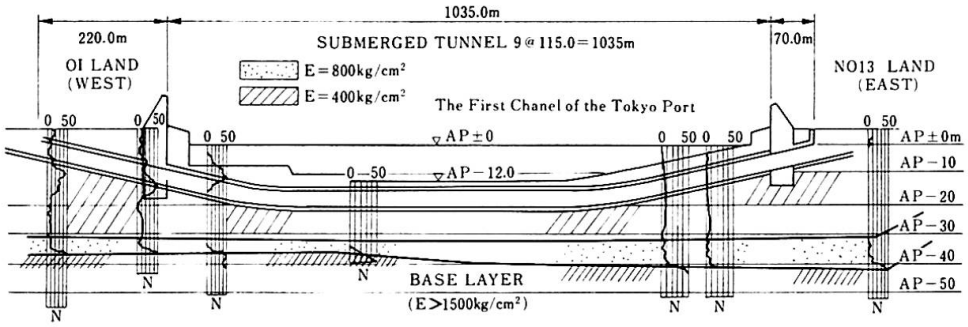

Fig-2 Geologcal map of the site of the Tokyo Port Tunnel

2-1 Earthquake response analysis

Earthquake response analysis on this tunnel was carried out by using the mathematical model which was jointly developed by Dr. OKAMOTO, Dr. TAMURA and HAMADA. And the following calculation and analysis were made by them and the Metropolitan Expressway Public Corp.

Horizontal vibrations are analytically divided into two directions along the tunnel axis and prependicular to it as shown in Fig. 3.

The ground from the west side to the east side, 1,325m long in total, was divided into 46 slices of 30m in thickness, and the distance between adjacent masses was taken as 30m.

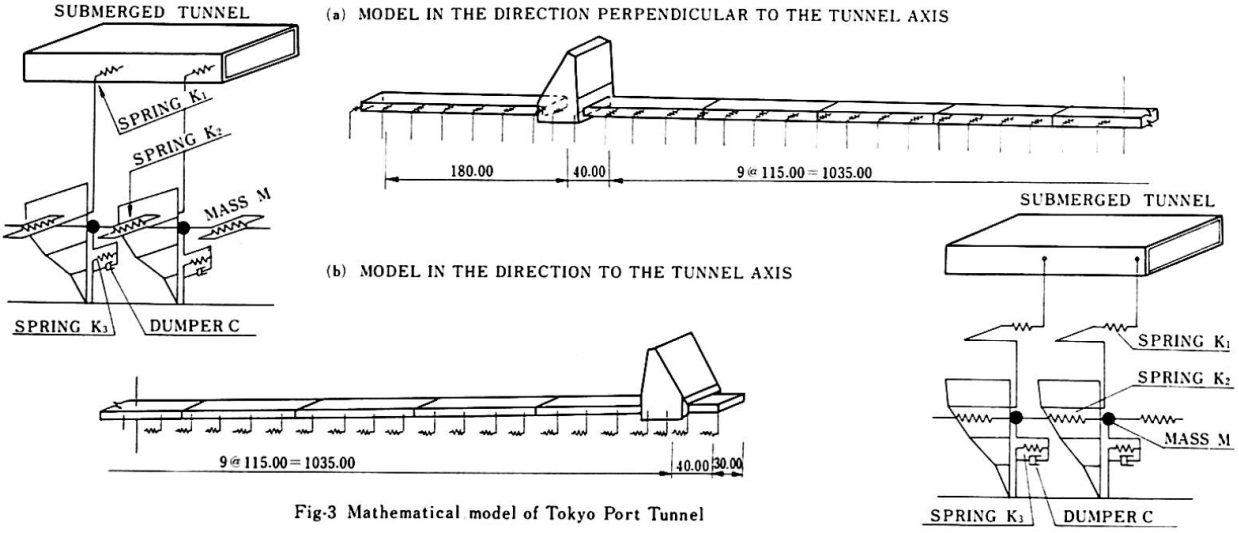

Fig-3 Mathematical model of Tokyo Port Tunnel

Responses in two directions were calculated mainly by using EL Centro NS 1940 and Aomori NS 1968 (Off-Tokachi Earthquake) records as in-put seismic waves, the latter having comparably longer period when compared with the former. As a result of calculations, the followings were learned:

1) The distribution shapes of maximum values of bending moment, shearing force, axial force and displacement of the tunnel are all very similar each other, but the magnitudes of stress and displacement differ considerably depending on the input seismic waves.
2) Changes in dynamic characteristics of the ground along the tunnel axis, such as at the slope of the ground, give great influence on the stress in the tunnel during earthquake.
3) Relative displacement between the tunnel and the ground is smaller for vibration in the lateral direction than in the axial direction.

In the mathematical model, dynamic characteristics of the ground was represented by the one mass-one spring system equivalent to the fundamental shear vibration of the ground. To clarify the influence of the higher order mode of the ground motion, response displacement analysis were performed with Aomori NS and EL Centro NS, taking natural modes up to the third order of the ground into account. The result showed only several percent difference at most, so it was made clear that the displacement of the ground at the site could surely be represented by that of the mathematical model.

2-2 Effects of joints between Tunnel Elements

From the fact that stress distributions along the tunnel axis were very similar regardless of different type of input seismic waves, it became possible to develop an earthquake resistant design method for the submerged tunnel. For this purpose trial calculations were made for several cases.

In Fig. 4, case 1 shows a case that neither hinged joints nor spring joints are constructed, in case 2 hinged joints are constructed at points 5 and 32, and in case 3 at points 5 and 28. In case 4, spring joints are inserted for all the joints between tunnel elements.

For input seismic waves, Aomori, NS, 1968, maximum acceleration being modified to 100 gals, was adopted in analysis. From a result of the calculations, the following were made clear:

1) The hinged joint is effective to make bending moment and shearing force diminish, but its range of effectiveness is limited within about 100m from the joint for this tunnel.
2) Hinged joints make the tunnel flexible more, however restriction against deformation diminishes, and a small increase of stress is caused, as a result, at a portion fairly apart from the hinged point.
3) When spring joints are constructed between all elements, bending moment, shearing force and axial force decrease by nearly 50%.
4) Only a small increase is observed for the displacement of the tunnel by the insertion of hinged or spring joints. When hinged joints or spring joints are to be constructed, much care should be exercised in determining their positions.

2-3 Effects of Joints between Tunnel and Ventilation Tower

In the case of this Tunnel, the site of ventilation towers were so planned as to locate at the both ends of the tunnel on its axis. Since the ventilation tower shows different behavior during earthquakes, it was expected that large stress may be generated in the tunnel around the terminal joints. In this connection, three cases were considered. In case 1, the tower and the tunnel are made movable independently each other, in case 2 are connected by means of hinges (only for the lateral vibration), and in case 3 are rigidly connected.

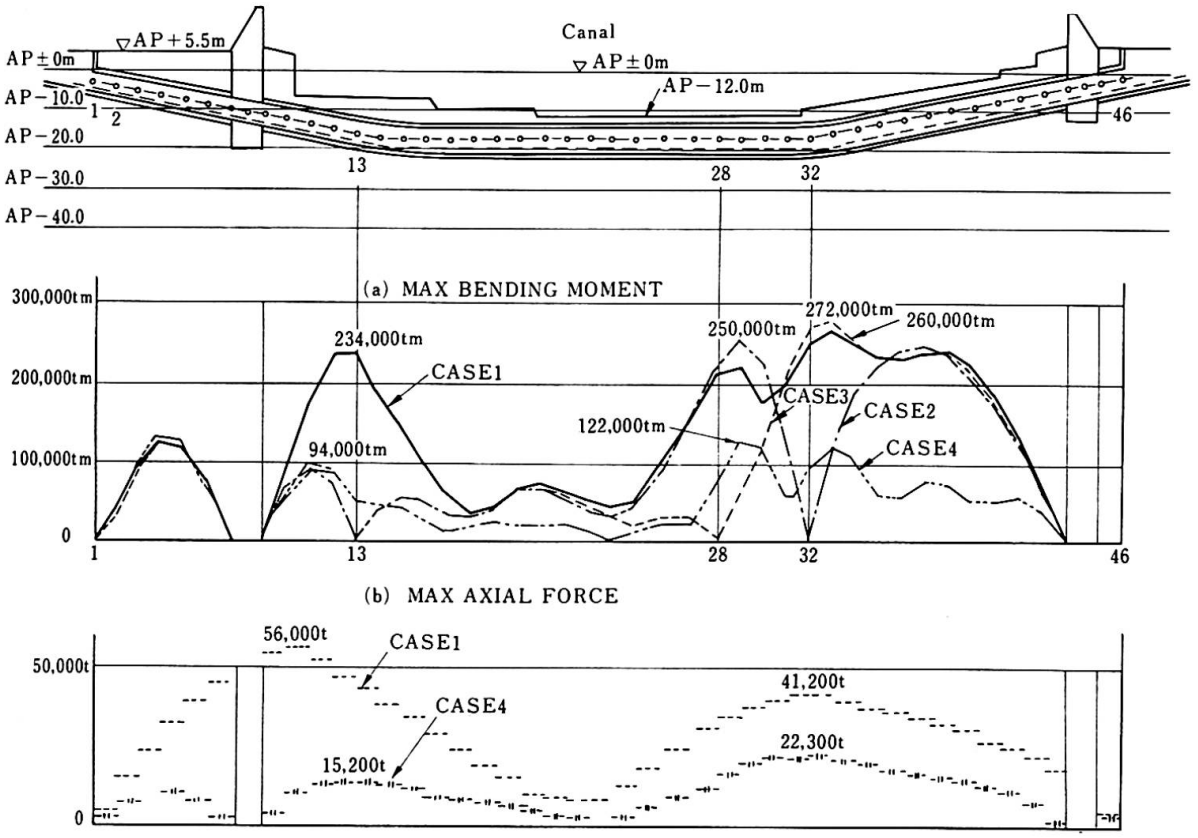

Fig-4 Influence of hinged joints and free joints on stresses of the tunnel

As easely understood from Fig. 5, considerably large bending moments are generated near the ventilation tower, and steeply decrease with the distance from the ventilation tower and same tendency goes for axial force too. The maximum bending moments caused at points more than 150m apart from the ventilation tower are almost same for all cases.

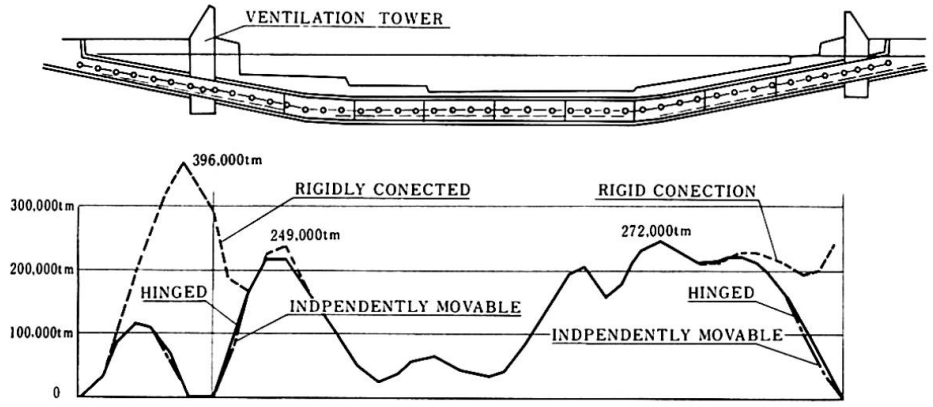

Fig-5 Influence of joints between the tunned and the ventilation tower on berding moment of the tunnel

Similarly, Fig. 5 indicates that extent of about 250m from the tower is under influence regarding axial force.

In both cases of the hinged and free joints, the values of the maximum bending moment are equal, and considerably small when compared with the values in the case of rigid connection. From the above-mentioned results, it is recommended that terminal joint between the tunnel and the ventilation tower should be made as flexible laterally and movable axially as possible in order to reduce stress concentration near the tower to the minimum.

2-4 Joint Structure actually applied

Fig. 6 shows the joint details actually applied at the first joint and the joint is able to move ± 4 cm horizontally and + 4 cm axially toward the approach tunnels, but the movement toward the sea bottom side is restrained under 10 cm by the function of SEEE Cables specially installed between the ventilation building and adjoining element.

Fig. 7 shows ordinary joint details. Utilizing the joint space, both horizontal and vertical shearing key, and the second water proofing, etc. are installed, and the upper side of the joint space is covered with specially devised Ω type steel plate against bending moment, axial force and shearing power which is generated at the primary stage of earthquake motion.

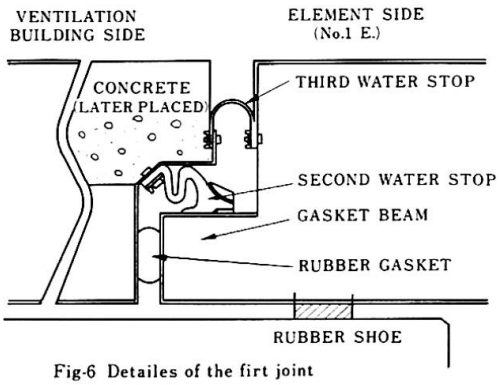

Fig-6 Detailes of the firt joint

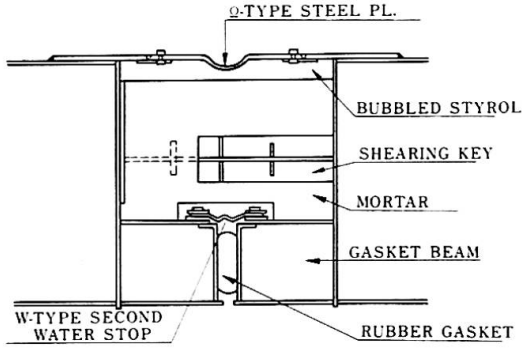

Fig-7 Detailes of the Flexible joint

3. Motar Grouting

Up to this time, what is called "Sand Jetting Method" has been used in the treatment of foundation of ordinary submerged tunnel with big cross section. However in this tunnel, mortar grouting method was newly developed. This method has such a great merit that the process of filling up the space between undersurface of a element and sea bottom is not disturbed by weather or sea condition, and also grout mortar itself has wide variety in choice.

3-1 Bentonite Mortar

The strength of grout mortar for the foundation of element is good enough with low strength. So much importance was rather attached to how to fill up the space as completely as possible. Several kinds of grout mortar were studied, for example, bentonite mortar, air bubble mortar and silt mortar. The bentonite mortar was adopted in a result.

The strength comes down by using bentonite as admixture, however it became possible to raise the filling up ratio with effect of the improvement of workability in lean mix mortar, prevention of material segrigation and continuity of fluidity for long hours. The following experiments were carried out prior to execution, and data for actual execution were obtained.

(A) Bentonite mortar proportion test
(B) Small sized grouting test
(C) Large sized (same as actual size) grouting-test

As a result of experiments, it was confirmed that more than 80% at minimum can surely be filled up.

Following is a standard proportion of bentonite mortar.

Cement	Bentonite	Water	Sand	Rital	per $1m^3$ Flow Value
150kg	37.5kg	647kg	750kg	1.5kg	14 – 18 sec

In the actual execution, the strength of bentonite mortar were fairly scattered, however, its strength was $\sigma 7=1.46$, $\sigma 14=2.49$ and $\sigma 28=3.42 kg/cm^2$ on the average.

3-2 Mortar Grouting

Prior to grouting, the clearance between under-surface of a element and sea bottom was measured just under all grouting holes by using mortar level meter (super sonic wave detector). Approximate volume of mortar to be grouted was calculated by data obtained.

The order of grouting was principally carried out in accordance with the chart shown in Fig. 8. According to the mortar flow test, the mortar does not flow uniformly in all directions, but in some direction, showing something like belt with 2 – 3 m width, and the mortar flows in other directions similarly, when the initial flow stops. Referring to this mortar flow behaviour, the mortar level meters were arranged at the suitable holes.

In order to prevent grout mortar to leak outside the projected plane of a element, mortar stoppers were applied, namely long mortar bag in the direction perpendicular to the tunnel axis, and crushed sand stone buried at the both sides of a element in axial direction.

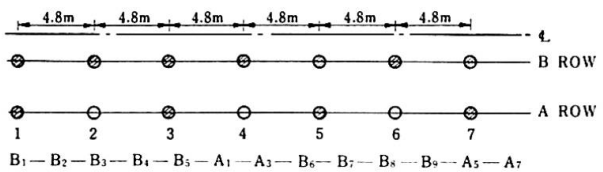

Fig-8 Order of mortal grauting

Effectiveness of grouted mortar was confirmed by comparing a theoretically estimated value of settlement of a element with actual settlement generated when the vertical jacks which were provided at the both sides of the top end of a element were released.

4. Countermeasure for Consolidation Settlement

In a result of the past several years' survey, settlement of alluvial layer supporting the tunnel, was thought to arise in future, being caused by silt layer's consolidation itself and the drop of underground water level in the diluvial gravel

layer, mainly around eastern half of the tunnel. This drop of water level was caused by over pumping up for industrial use, but this underground water level is maintained at -7 m for these years by the severe government regulation.

In a result of comprehensive study, the settlement of the ground was estimated -10 cm at the center, -30 to 40 cm at the eastern end and negligible at the western half of the tunnel respectively. In this circumstances, the followings were considered for countermeasures.

1) replacing silt layer with sand
2) driving sand piles
3) to promote consolidation by preloading
4) rising up the underground water level
5) application of pile foundation

These methods were studied from such points of views as cost, construction period, construction process and effects of application. However the point of application was how to secure a continuity of the supporting condition to the elements.

For this purpose, a pile system which can follow the ground settlement to some extent and finally get settled on a ideal vertical line was studied. In ordinary piles, such as friction piles and semi-supporting piles which are both able to give a certain degree settlement, it is very difficult to secure prearranged settlement calculated from the settlement line.

In this circumstance, a pile, which functions as supporting pile ultimately by the operation of some divice put on the top of a pile, when the element reaches prearranged settlement, was developed.

This special device is shown in Fig. 9.

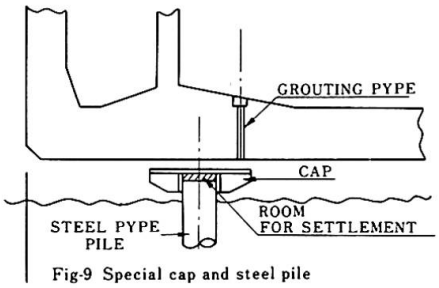

Fig-9 Special cap and steel pile

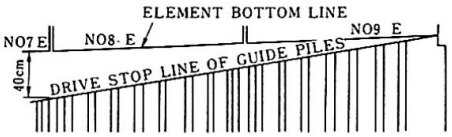

Fig-10 Pile arrangement in the axial direction

This cap, made from steel plate, is placed on the pile top, when steel pipe pile is driven. It is not necessary for a pile to be driven to accurate level position, as far as the cap with proper settlement allowance is placed on regular position because the space between the undersurface of element and sea bottom is filled by grout mortar.

Piles were cross sectionally so positioned just under grouting holes that grout mortar can surely fill up the space.

Piles were set from the end element (the 9th element) up to the quarter point of the 7th element, in such a manner that the settlement allowance changes in a straight line along the axis with 40 cm just under the joint between 7th and 8th element and no margine under the terminal joint, taking such all feasible conditions into consideration as allowable deformation of element, flexibility of joint and the development process of ground settlement, etc.

5. Bibliography

1) Earthquake Observation on Trench Type Subaqueous Tunnel.
Report of The Institute of Industrial Science, The University of Tokyo. By Chosiro TAMURA, Shunzo OKAMOTO, Katsuyuki KATO, Yoshitaka NAKAGAWA.
2) Dynamic Behavior of Submerged Tunnel during Earthquake.
Report of the same Establishment. By Chosiro TAMURA, Shunzo OKAMOTO, Masanori HAMADA.

6. Summary

The anti-earthquake design and construction of the submerged tunnel on the soft ground are presented. The analytical technique conducted herein is widely applicable to the earthquake resistant design of submerged tunnel. The seismometer observation now being carried out will provide the data to improve the method of analysis.

New technique of grouting into the bottom of the tunnel operated inside of the elements seems to be used widely in off-shore structures.

Newly developed capped piles foundation is also a good countermeasure against ground settlement.

SUMMARY

The anti-earthquake design and construction of the submerged tunnel on the soft ground are presented. The analytical technique conducted herein is widely applicable to the earthquake resistant design of submerged tunnel. A seismometer observation now being carried out will provide the data to improve the method of analysis. New technique of grouting into the bottom of the tunnel operated inside of the elements seems to be used widely in off-shore structures. Newly developed capped piles foundation is also a good countermeasure against ground settlement.

RESUME

L'étude anti-sismique et la construction d'un tunnel immergé sur des fondations compressibles sont présentées. La méthode analytique employée s'applique facilement à l'étude de la résistance aux tremblements de terre. Les observations actuellement réalisées par sismographe donneront des informations permettant d'améliorer cette méthode analytique. Il semble possible d'utiliser pour des ouvrages d'art martimes, la nouvelle technique d'injection de coulis de mortier sous tunnel à partir de l'intérieur des éléments. La nouvelle technique de fondation par pieux avec têtes élargies semble aussi une bonne solution contre les tassements importants.

ZUSAMMENFASSUNG

Ueber die Untersuchung des Verhaltens gegenüber Erdbeben von abgesenkten Tunnels auf nachgiebigem Baugrund wird berichtet. Die verwendete Berechnungsmethode eignet sich gut für die Ermittlung des Tragwerkwiderstandes gegenüber Erdbeben. Im Gang befindliche Messungen mit Seismografen werden Ergebnisse liefern, die eine Verbesserung der Berechnung gestatten. Die neu entwickelte Methode, vom Innern der Tunnel-Elemente aus den Zwischenraum zwischen Bauwerk und Baugrund zu injizieren, eignet sich ganz allgemein für überflutete Bauwerke. Ebenso erscheint die Verwendung von Pfahlfundationen mit vergrösserten Pfahlköpfen als gutes Mittel gegen Baugrundsetzungen.