Zeitschrift: IABSE congress report = Rapport du congrès AIPC = IVBH Kongressbericht

Band: 10 (1976)

Artikel: A basic parameter for optimum design of arch and suspension bridges

Autor: Hirai, Itio / Yoshimura, Torazo

DOI: https://doi.org/10.5169/seals-10419

Nutzungsbedingungen

Die ETH-Bibliothek ist die Anbieterin der digitalisierten Zeitschriften auf E-Periodica. Sie besitzt keine Urheberrechte an den Zeitschriften und ist nicht verantwortlich für deren Inhalte. Die Rechte liegen in der Regel bei den Herausgebern beziehungsweise den externen Rechteinhabern. Das Veröffentlichen von Bildern in Print- und Online-Publikationen sowie auf Social Media-Kanälen oder Webseiten ist nur mit vorheriger Genehmigung der Rechteinhaber erlaubt. Mehr erfahren

Conditions d'utilisation

L'ETH Library est le fournisseur des revues numérisées. Elle ne détient aucun droit d'auteur sur les revues et n'est pas responsable de leur contenu. En règle générale, les droits sont détenus par les éditeurs ou les détenteurs de droits externes. La reproduction d'images dans des publications imprimées ou en ligne ainsi que sur des canaux de médias sociaux ou des sites web n'est autorisée qu'avec l'accord préalable des détenteurs des droits. En savoir plus

Terms of use

The ETH Library is the provider of the digitised journals. It does not own any copyrights to the journals and is not responsible for their content. The rights usually lie with the publishers or the external rights holders. Publishing images in print and online publications, as well as on social media channels or websites, is only permitted with the prior consent of the rights holders. Find out more

Download PDF: 10.01.2026

ETH-Bibliothek Zürich, E-Periodica, https://www.e-periodica.ch

A Basic Parameter for Optimum Design of Arch and Suspension Bridges

Un paramètre fondamental pour le calcul optimal de ponts suspendus et en arc

Ein Grundparameter für die Optimierung von Bogen- und Hängebrücken

ITIO HIRAI
Professor
Kumamoto University
Kumamoto, Japan

TORAZO YOSHIMURA
Professor
Kyushu University
Hakozaki, Fukuoka, Japan

1. Introduction

The purpose of this paper is to propose a basic parameter effective to the optimum designs of arch and suspension bridges. Since the dynamic factors (e.g., eigenvalues and eigenvectors) and the static factors (e.g., influence lines for deflection and bending moment) of an arch (or suspension) bridge are subjected to this parameter only, designated by F , we are able to determine the F value which satisfies the structural optimization of the bridge, which means that one constraint can be made for the design variables of the bridge. For the optimum design of an arch (or suspension) bridge, its geometry and the cross sectional areas of the elements such as the arch and the stiffening girder will be the design variables. These design variables are usually found by mathematical and numerical search methods. Although these search methods are applicable to a variety of problems, they require repeating similar calculation changing the values of the design variables until the optimum conditions are satisfied. So, it will save much computer cost to give the one constraint for the design variables.

There are many analogous points between a suspension bridge and an arch bridge, and they may be said to be essentially of the same type of structure from the view-point that they have girders stiffened with parabolic members (= cable and arch) respectively. So, both structures can be analyzed by a common theory (2).

In general, the cross sections of the elements such as the arch and the stiffening girder are variable. For these elements, the average values should

be used as approximate values. The errors due to the approximation seem to be small judging from numerical examples.

2. Theory

In this paper, the bridges are assumed to satisfy the following conditions:
(i) The stiffening girder is of uniform cross section and simply supported at both ends.
(ii) The cross section of the arch (or cable) is constant and its mass is transferred to the stiffening girder.
(iii) The flexural rigidity of the arch can be transferred approximately to the stiffening girder.
(iv) The arch (or cable) configuration is given by a parabolic function.
(v) The arch (or cable) and stiffening girder are connected with an infinite number of hangers whose elongations are completely neglected.

When the arch and stiffening girder shown in Fig. 1 is forcibly deformed by the amount given by

$$w = \sum_n a_n \sin\frac{n\pi x}{l} \qquad (1)$$

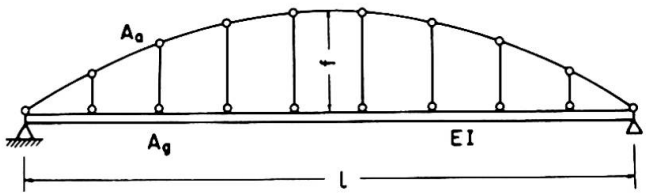

Fig. 1

where l : span, the horizontal thrust ΔH of the arch is found from the compatibility condition:

$$\Delta H = \frac{16fEB}{\pi l^2}\sum_n \frac{a_n}{n} \qquad \text{for } n = 1,3,5,\ldots \qquad (2)$$

$$= 0 \qquad \text{for } n = 2,4,6,\ldots \qquad (3)$$

$$\text{where} \qquad B = \frac{A_a}{\frac{A_a}{A_g} + 1 + 8\left(\frac{f}{l}\right)^2 + 19.2\left(\frac{f}{l}\right)^4} \qquad (4)$$

A_a (A_g) : cross sectional area of arch (girder). From this, we see that the arch resists symmetric deformation only and does not resist asymmetric deformation. In other words, for asymmetric deformation the arch bridge is reduced to a simple girder.

The amplitude of the simple girder loaded with a periodical uniform load $p_g \sin\omega t$ (in Fig. 2) is given by

$$w = \frac{4p_g}{\pi\rho}\sum_n \frac{1}{n(\omega_{gn}^2-\omega^2)}\sin\left(\frac{n\pi x}{l}\right) \qquad (5)$$

where

$$\omega_{gn} = \left(\frac{n\pi}{l}\right)^2 \sqrt{\frac{EI}{\rho}}$$

(= n-th natural frequency of the girder) and ρ : mass per unit length of the girder.

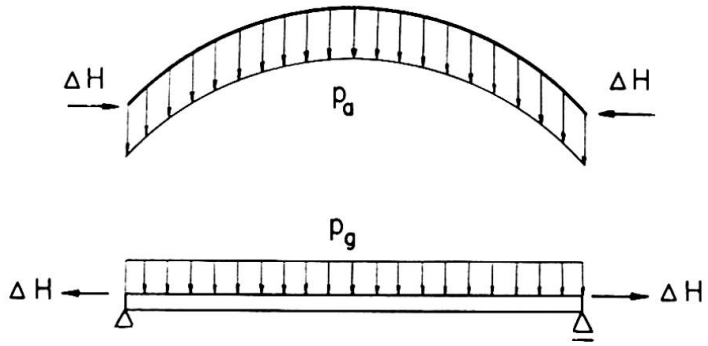

Fig. 2

When the arch bridge is forced to vibrate at the amplitude represented by Eq. (5), the thrust ΔH caused in the arch is computed directly from Eqs. (2) and (5), i.e.,

$$\Delta H = \frac{64fEB}{\pi^2\rho l^2} \sum_n \frac{1}{n^2(\omega_{gn}^2-\omega^2)} p_g \tag{6}$$

When the arch is isolated from the girder, retaining its deformation, a uniform load p_a must be placed on the arch to let it satisfy the equilibrium condition of force and moment, and its magnitude is determined from,(3)

$$p_a = \frac{8f}{l^2}\Delta H = \frac{512Ef^2B}{\pi\rho l^4} \sum_n \frac{1}{n^2(\omega_{gn}^2-\omega^2)} p_g \tag{7}$$

Fig. 3

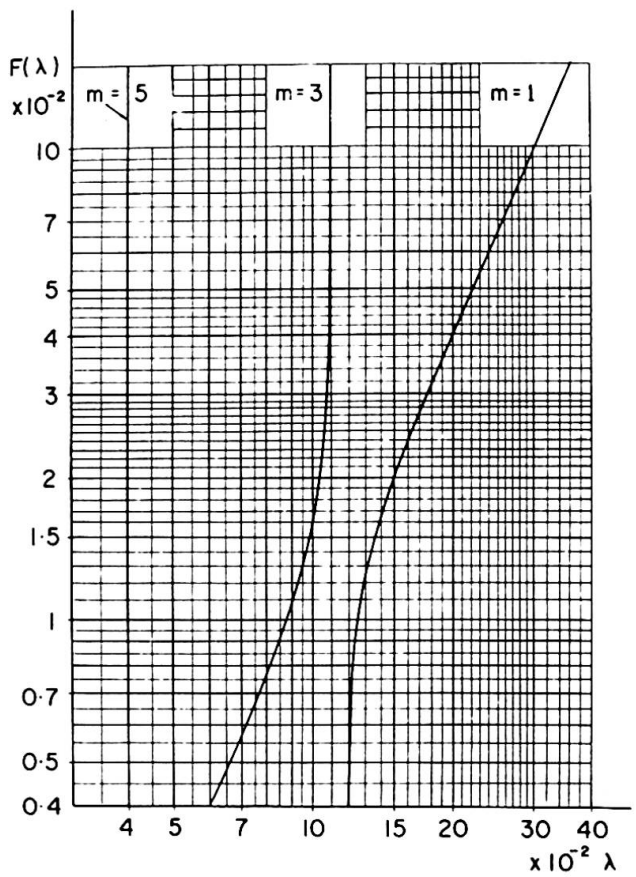

Let us superpose the arch and girder to restore the arch bridge. The arch bridge constructed in this way is subjected to a uniform load with the magnitude

$$p_0 = p_a + p_g \tag{8}$$

Using the condition that the applied force must be zero for free vibration, i.e.,

$$p_a + p_g = 0 \tag{9}$$

we arrive at the following frequency equation:

$$1 + \frac{512Ef^2B}{\pi^2\rho l^4} \sum \frac{1}{n^2(\omega_{gn}^2-\omega^2)} = 0$$

$$n = 1,3,5,\ldots, \tag{10}$$

which can be expressible in the following nondimensional form,(1)

$$F(\lambda) = \frac{\pi^6 I}{512 f^2 B} = \sum_n \frac{1}{n^6(1-n^4\lambda^2)} - 1.0014 \tag{11}$$

where

$$\lambda = \frac{\omega_{g1}}{\omega}, \quad \omega_{g1} = \left(\frac{\pi}{l}\right)^2 \sqrt{\frac{EI}{\rho}} \qquad \ldots (12)$$

The left hand side, i.e., F -- value is a non-dimensional value to be determined from the dimensions of the arch bridge. The relation between F and λ is shown in Fig. 3. The m-th natural mode $\phi_m(x)$ is computed by substituting the m-th natural frequency ω_m, obtained from Eq. (11), into Eq. (5). That is,

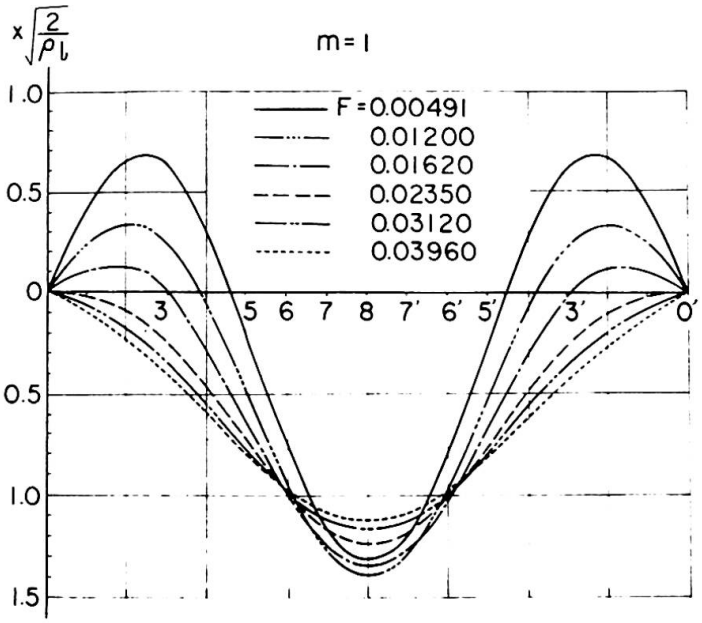

Fig. 4

$$\phi_m(x) = \sum_n b_{mn} \sin \frac{n\pi x}{l}, \qquad \left(b_{mn} = \frac{1}{n(\omega_{gn}^2 - \omega_m^2)} \right) \tag{13}$$

For the normalized mode $\Phi_m(x)$, we have

$$\Phi_m(x) = C_m \sum_n b_{mn} \sin\left(\frac{n\pi x}{l}\right), \qquad C_m^2 = \left(\frac{2}{\rho l}\right) \left(\sum b_{mn}^2 \right)^{-1} \tag{14}$$

The first normalized mode $\Phi_{m=1}(x)$ is shown in Fig. 4 for some F-values. Once the m-th natural frequencies ω_m and the normalized modes $\Phi_m(x)$ have been found, the dynamic and static responses are easily determined.

The static deflection w_s at x due to the force P_0 applied at x_j is found from

$$w_s = \sum_m \frac{\Phi_m(x)\, \Phi_m(x_j)}{\omega_m^2} P_0 \tag{15}$$

and the bending moment M^B is calculated from

$$M^B = -EI \frac{d^2 w_s}{dx^2} \tag{16}$$

Note that these responses are subjected to the non-dimensional parameter F. For example, the influence lines for deflection at $l/4$ and $l/2$ points are shown in Figs. (5) and (6).

Fig. 5

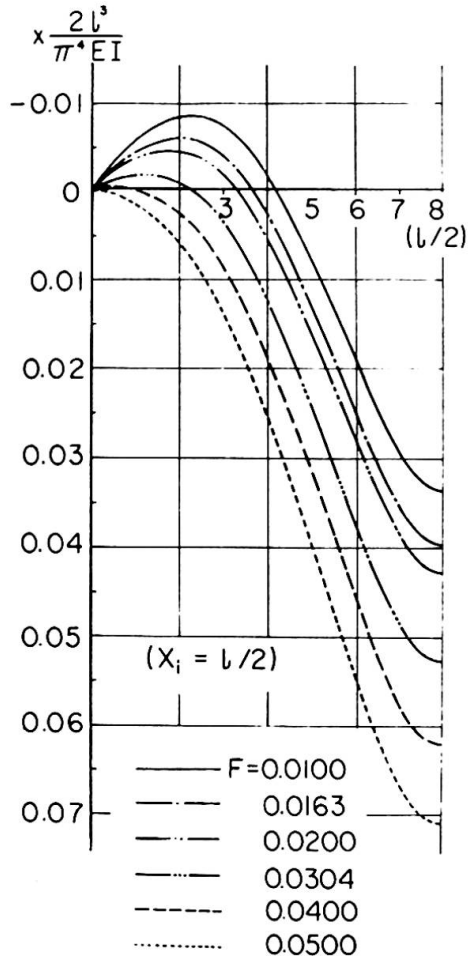

Fig. 6

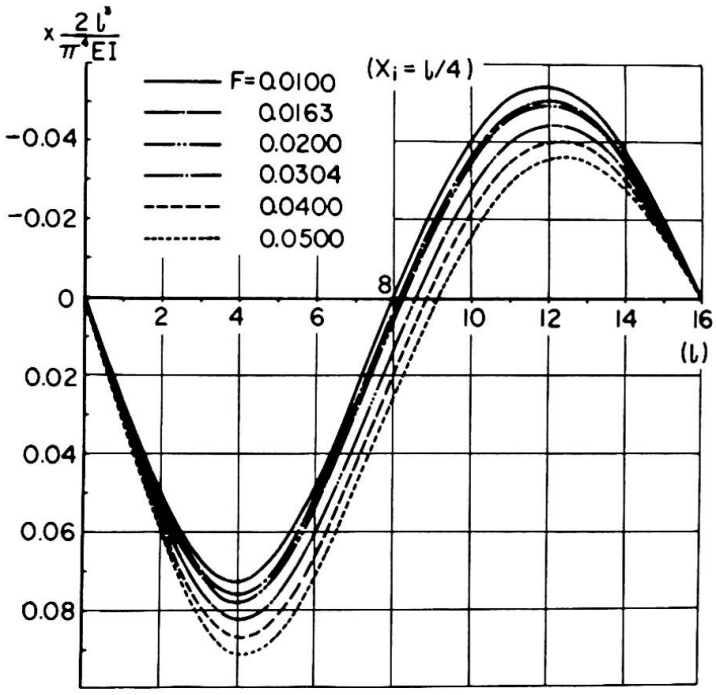

Fig. 7

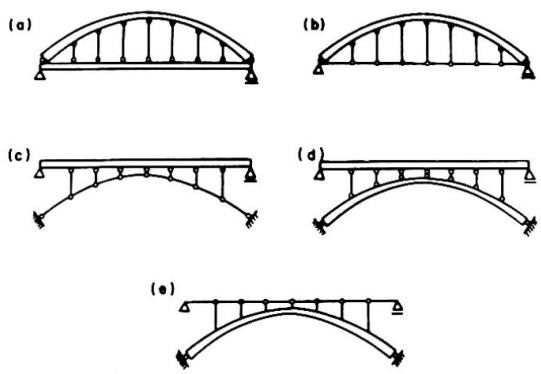

The aforementioned equations can be used for the arch bridges shown in Fig. 7 by changing the cross sectional areas and flexural ridigities of arches and stiffening girders. For the system (e) in Fig. 7, the flexural ridigity I_g of the girder is zero and the cross sectional area A_g of the girder is infinity.

The above equations derived for arch bridges can be applied to suspension bridges. For the suspension bridge shown in Fig. 8, the B in Eq. (4) is

Fig. 8

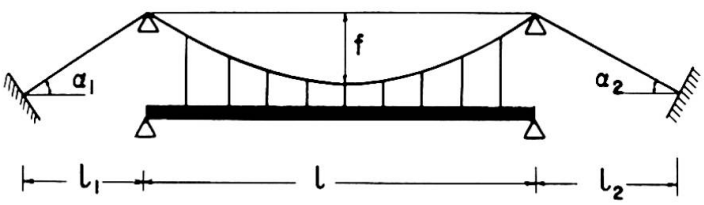

$$B = \frac{A_c}{1 + 8\left(\frac{f}{l}\right)^2 + 19.2\left(\frac{f}{l}\right)^4 + \frac{l_1}{l}\sec^3\alpha_1 + \frac{l_2}{l}\sec^3\alpha_2} \tag{17}$$

where A_c : cross sectional area of the cable.

3. References

1 Hirai, I., " Analyses of Eigenvalue Problems by the Use of External Forces ", Research Report, ST-1-68, Engineering Science, Univ. of Western Ontario, London, Canada, Jan., 1968.

2 Yoshimura, T., Hirai, I., " Dynamic Analysis of Stiffened Arch Bridges and Suspension Bridges ", Transactions of Japan Society of Civil Engineers, No. 115, 1965, pp. 1-11.

3 Yoshimura, T., Hirai, I., " Dynamic Analysis of Arch with Stiffening Girder", Transactions of Japan Society of Civil Engineers, No. 101, 1964, pp. 1-14.

SUMMARY

This paper proposes a basic parameter effective to the optimum design of arch and suspension bridges. The dynamic factors (for example, eigenvalue problem) and static factors (for example, stress and deformation) of these bridges are subjected to this parameter only, which means that one constraint can be made for some design variables. So, numerical calculation will easily be done on the basis of this parameter. Several diagrams are shown.

RESUME

Ce mémoire propose un paramètre fondamental qui est efficace pour le calcul optimal de ponts suspendus et en arc. Les facteurs dynamiques (par exemple le problème des valeurs principales) et les facteurs statiques (par exemple la contrainte et la déformation) de ces ponts ne dépendent que de ce paramètre. Le nombre de variables peut alors être réduit et les calculs numériques effectués facilement. Quelques diagrammes sont présentés.

ZUSAMMENFASSUNG

In dieser Mitteilung wird ein für die Optimierung von Bogen- und Hängebrücken geeigneter Grundparameter vorgeschlagen, der dynamische Faktoren (z.B. Eigenwertprobleme) und statische Faktoren (z.B. Spannung und Deformation) dieser Brücken berücksichtigen kann. Dies bedeutet, dass die Zahl der Entwurfsvariablen reduziert und die Berechnung vereinfacht werden kann. Diagramme für die praktische Anwendung werden angegeben.

Planning of Floor System at Long-Span Suspension Bridges

Conception du système de platelage pour des ponts suspendus de longue portée

Deckensysteme für weitgespannte Hängebrücken

TOSHIKAZU SURUGA
Chief, Technical Section
S.C.E. Group, Kobe Steel Ltd.
Kobe, Japan

YUKIO MAEDA
Prof. of Civil Engineering
Osaka University
Suita, Osaka, Japan

1. Introduction

When a long-span suspension bridge is planned, the selection of its floor system as well as its suspended structure has great influence on its safety and economy, and its erection and maintenance. When a floor system is planned at a long-span suspension bridge provided with stiffening truss girders, many kinds of floor systems can be proposed as discussed later in this paper. At the present study, structural features of various floor systems are examined and compared with one another on such condition as fabrication, erection, maintenance, economy, etc..

Through discussions the relationship of planning of the floor system with construction methods will be evaluated in detail for a design example of bridge in Japan.

2. Suspended Stiffening Structures and Floor System

In the planning of a long-span suspension bridge two type of suspended stiffening structures are considered: one is a truss type structure and another is a box girder type one. Since the former is more conventional than the latter in Japan, a truss type stiffening structure with a floor system combined with an open grating floor, as shown in Fig. 1.

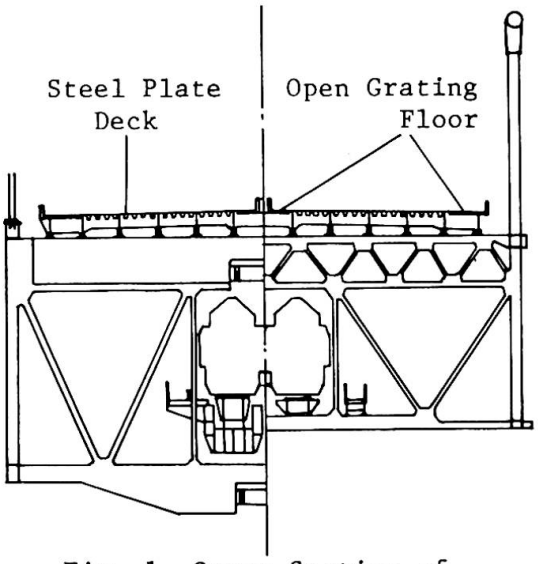

Fig. 1 Cross Section of Suspension Bridge

Many kinds of construction methods for the floor system can be proposed as discussed later in this paper. Now, the comparative study was carried out on a heavy weight floor system (closed steel grating floor) with a light weight one (steel plate deck) in steel amount and cost at

their construction time, at an illustrated suspension bridge, which has a length of 1630 m consisting of a main span of 870 m and two side spans of each 380 m, and has a width of 30 m. The result of this comparision is given in the Table 1, which shows that the bridge with the light weight floor system has the advantage of the heavy weight one in steel amount and cost. Since there is an opinion that the floor system had better be heavier judged from the aerodynamic stability of a long-span suspension bridge, the relative merits for aerodynamic stability between heavy and light weight floor systems have to be discussed separately.

Table 1 Comparision for steel construction of super-structure at suspension bridge

Steel Works	Bridge with Closed Steel Grating Floor			Bridge with Steel Plate Deck		
	Weight (ton)	Unit Price (10^3 yen)	Sum of Money (10^6 yen)	Weight (ton)	Unit Price (10^3 yen)	Sum of Money (10^6 yen)
Floor System	11 420	350	3 997	11 930	400	4 772
Stiffening Structure	26 750	400	10 700	26 250	400	10 500
Cable	20 840	600	12 504	18 580	600	11 148
Tower	10 930	400	4 372	10 230	400	4 112
Anchorage	5 660	300	1 698	4 980	300	1 494
Total	75 600		33 271	61 970		32 026

3. Outline of Each Floor System

In planning of a floor system for a long-span suspension bridge, its laod-carrying capacity, durability, aerodynamic stability, deformation adaptability, easy and fast erection, easy maintenance, overall cost saving and so on, have to be examined. Several floor systems including new construction methods which have been developed by authors, will be discussed as follows:

(1) Floor system with reinforced concrete slab: A conventional reinforced concrete slab deck is considered to be generally cheapest one among various floor decks at present day in Japan. On the other hand, site works of forming and reinforcing at high elevation of a bridge are not always suitable for safe and fast erection.

(2) Floor system with closed steel grating Floor[1,2]: This type of floor, as shown in Fig. 2, was adopted in Verrazano Narrows

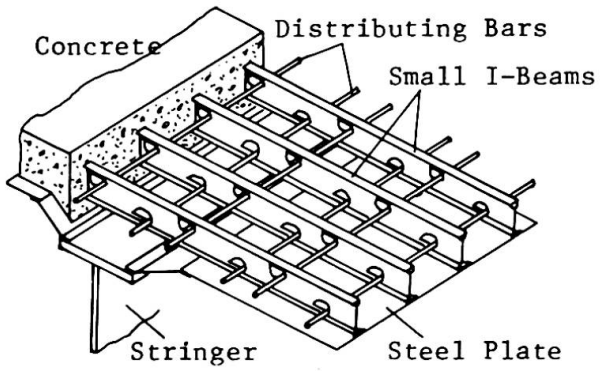

Fig. 2 Detail of Grating Floor System

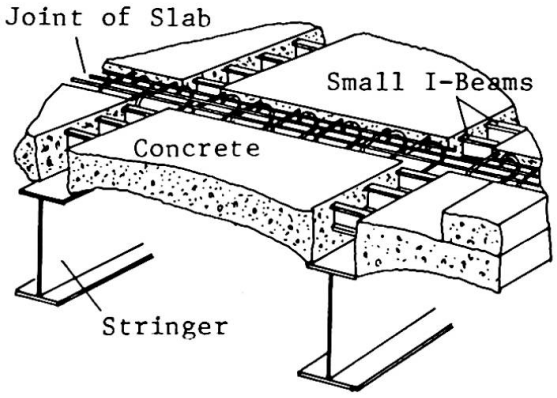

Fig. 3 Detail of Precast Concrete Steel Grating Floor

(UAS), Kanmon Bridge(Japan) and so on.

(3) Floor system with precast concrete steel grating floor: This floor is illustrated in Fig. 3, and its slab concrete is precast at a shop and after it is connected to steel stringer, concrete is cast between slab and slab, and also between slab and stringer.

(4) Floor system with prefabricated steel deck plate sandwiching concrete: This deck proposed by authors[3], consists of two steel plates and concrete sandwiched between them. These plates are connected with stud bolts, and stud shear connectors are welded to both of the plates making a steel-concrete composite deck. Photo. 1 shows shop assembly of this deck before filling up concrete. Fig. 4 and 5 show jointing methods of this deck.

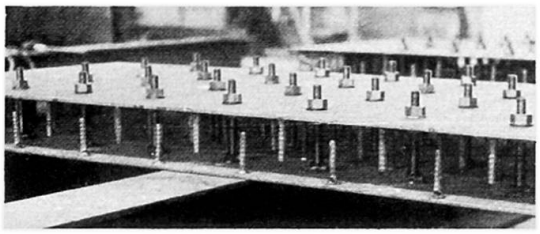

Photo. 1 Assembly of deck

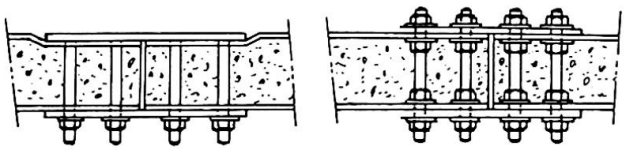

Fig. 4 Jointing of Deck Plates

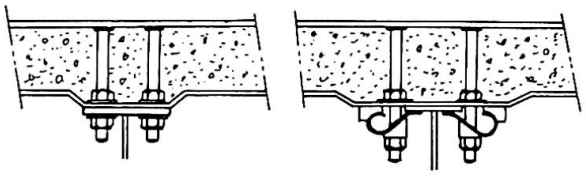

Fig. 5 Jointing of Deck Plate to Beam

(5) Floor system for prefabricated composite girder: This composite girder, proposed by the authors[4] as shown in Fig. 6, consists of an inverted steel T-beam without an upper flange and a steel grating floor frame, which is directly attached at a shop. After the prefabricated floor deck is connected to main cross beam of stiffening trusses, the slab concrete is cast at the site.

(6) Floor system with orthotropic steel plate deck: A typical steel deck panel which is well known is shown in Fig. 7.

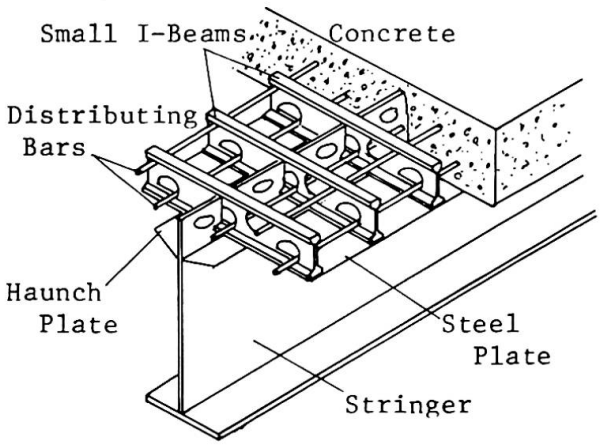

Fig. 6 Detail of Prefabricated Composite Girder

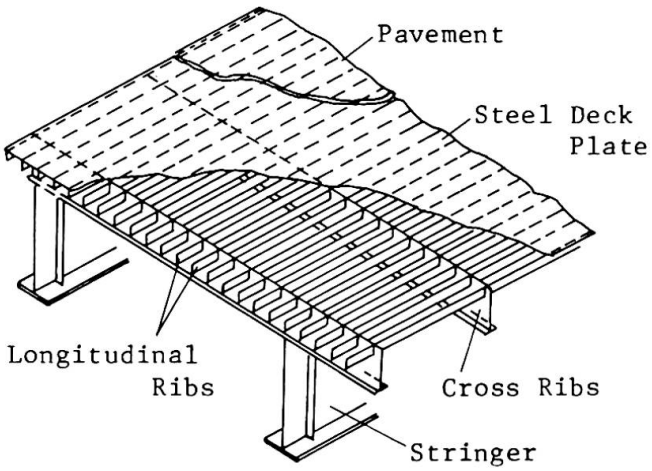

Fig. 7 Ditail of Orthotropic Steel Plate Deck

(7) Hollow steel plate deck: This deck developed by the authors has such a cross section as shown in Photo. 2, and the welded steel deck consists of two face plates and core plates which are installed diagonally as shown Photo. 2. To apply this deck to a floor system at a suspension bridge, it is set on main

cross beams of trusses directly without stringer.

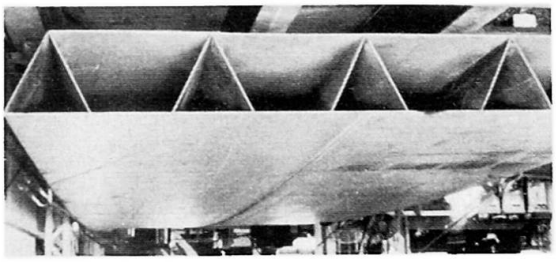

Photo. 2 Hollow Steel Plate Deck

4. Comparision of Floor Systems in Terms of Weight and Cost

In order to evaluate which floor system will be the most suitable for a long-span suspension bridge, the design of each floor system outlined above was carried out under the same design requirements that each floor system has a span length of 12 m and a width of 11 m, and carries a live load of 20 tons truck specified at the Specification for Design of Highway Bridges, Japan Road Association, 1974. As the result of the design, dimension and construction cost of each floor system were obtained, and then unit weight and unit cost per square meters of a floor area could be calculated as shown in Table 2. The value of unit weight and unit cost show that the heaviest reinforced concrete slab is cheapest in cost while the lightest steel plate deck and hollow steel plate deck are high-priced. Therefore, it might be not only very difficult, but also risky to make decision only by these two conditions, because for a long-span suspension bridge the third condition expressed in terms of a kind of function or performance of the floor system has to be examined.

5. Function Condition and Decision Matrix

As function conditions, fabrication, erection, construction time, wind-resistance, paving, maintenance and overall economy may be considered for long-span suspension bridges. Each of the function conditions are defined as follows:

(1) Fabrication condition: the nature of fabrication works to evaluate easiness or hardness of steel works at a shop and time requirement for fabrication.
(2) Erection condition: the nature of erection works to evaluate easiness or hardness of field works and safety for operation at the site.
(3) Construction time: the time nature of erection works to evaluate a construction period.
(4) Wind-resistance: the condition of resistance against wind depending upon the height of a floor system and some other requirements.
(5) Paving: the nature of paving works depending upon the smoothness floor surface.
(6) Maintenance: the nature of maintenance works to be evaluated by painting on steel surface of a floor system, etc..
(7) Overall economy: an effect of the weight of a floor system on an overall construction cost of the whole bridge, because as seen in Table 1, the weight of the floor system of a suspension bridge may have great influence on the overall construction cost of the bridge.

While the weight and cost of a floor system is deterministic and certain, these function or performance conditions are uncertain and not deterministic. Therefore, it will be reasonable to evaluate a degree of those conditions by "excellent", "good", "ordinary" and "undesirable", to which marks may be given, respectively, with 4 points, 3 points, 2 points and one point for trial. Furthermore, a so-called emphasis coefficient k, may be proposed to evaluate

Table 2 Comparision of Floor Systems

Conditions \ Floor Systems		Reinforced Concrete Floor	Closed Steel Grating Floor	Precast Concrete Steel Grating Floor	Prefabricated Steel Deck Sandwiching Concrete Floor	Prefabricated Composite Floor	Steel Plate Deck	Hollow Steel Plate Deck
Unit Weight of Floor System $\left(\frac{kg}{m^2}\right)$		530	460	490	380	470	220	220
	in Ranking	7	4	6	3	5	1	1
Unit Cost of Floor System $\left(\frac{yen}{m^2}\right)$		50 000	60 000	65 000	70 000	65 000	85 000	75 000
	in Ranking	1	2	3	5	3	7	6
Fabrication	F_1	4	3	2	1	1	1	2
	$k_1 = 2$	8	6	4	2	2	2	4
Erection	F_2	1	3	3	2	3	4	4
	$k_2 = 3$	3	9	9	6	9	12	12
Construction Time	F_3	1	2	3	3	3	4	4
	$k_3 = 3$	3	6	9	9	9	12	12
Wind-Resistance	F_4	3	3	3	3	3	3	4
	$k_4 = 2$	6	6	6	6	6	6	8
Paving	F_5	3	3	3	2	3	2	2
	$k_5 = 2$	6	6	6	4	6	4	4
Maintenance	F_6	3	2	3	2	2	2	2
	$k_6 = 2$	6	4	6	4	4	4	4
Overrall Economy	F_7	1	2	2	3	2	4	4
	$k_7 = 3$	3	6	6	9	6	12	12
Total	ΣF_i	16	18	19	16	17	20	22
	$\Sigma k_i F_i$	35	43	46	40	42	52	56
Mean Value $\Sigma F_i / 7$	in Point	2.29	2.57	2.71	2.29	2.43	2.86	3.14
	in Ranking	6	4	3	6	5	2	1
Mean Value $\frac{\Sigma k_i F_i}{\Sigma k_i}$	in Point	2.06	2.53	2.71	2.35	2.47	3.06	3.29
	in Ranking	7	4	3	6	5	2	1

relative importance among the function condition or to emphsize relatively a specific condition. Here, the value of k is taken tentatively two or three, because it is very difficult to give deterministic numbers verified by numerical statistical data.

As shown in Table 2, each floor system depending on construction mehtods and each function condition with its emphasis coefficient will make a decision matrix and its outcome will express functional nature or performance evaluated by marks. In Table 2,

F_i = the i-th function condition with i=1 to 7,

k_i = the i-th emphasis coefficient with i=1 to 7.

The decision-making for function or performance will be made by either $\Sigma F_i / 7$ or $\Sigma k_i F_i / \Sigma K_i$, where

$\Sigma F_i / 7$ = a mean value for $k_i = 1$

$\Sigma k_i F_i / \Sigma k_i$ = a weight mean value.

The final decision has to be made in the overall result for weight, cost and function of each floor system, depending on the importance of these three factors because there is no common objective function among the factors for the most optimum floor system.

6. Conclusion

The following decision-making in planning will be concluded from Table 2 as an example:

(1) The most conventional reinforced concrete floor system is cheaper in construction cost, but is heavier in weight and undesirable in performance or function.

(2) Steel plate deck or hollow steel plate deck is more expensive in construction cost, but is lighter in weight and more desirable in performance or function, especially in erection and overall economy.

(3) The emphasis coefficient has to be determined more precisely, objectively by various field conditions at the site of bridge erection and subjectively by designer's judgement. With well-selected values of the emphasis coefficient, more weighted evaluation for the nature of function or performance could be made.

(4) When the suitability of a floor system cannot be judged from deterministic ranking alone based on its comparative designs, the relative evaluation of the floor system on its performance or function which is generally uncertain, will be of great help to approach to its optimum construction method.

References

1] Y. Maeda and S. Matsui, Proceeding of Japan Society of Civil Engineerings, No. 181, 1970 (in Japanease).

2] K. Kushida, S. Suruga and Y. Maeda, Symposium on Steel and Composite Structures for User Needs of IABSE (DRESDEN), 1975.

3] Y. Maeda and S. Matsui, Symposium on Mass-produced Steel Structures of IABSE (PRAHA), 1971.

4] Y. Maeda, T. Suruga and H. Yamada, Symposium on Mass-prodused Steel Structure of IABSE (PRAHA), 1971.

SUMMARY

The present study is intended to plan properly the floor system which will be optimum for a long-span suspension bridge with stiffening truss. Various construction methods for the floor system are examined in construction cost and weight by comparative designs, and also in its performance or function by a decision matrix.

RESUME

Le but de cette étude est de concevoir de façon optimale le système de platelage d'un pont suspendu de longue portée, dont le tablier est une poutre à treillis. Plusieurs types de platelage sont considérés, du point de vue méthode de construction, coût, poids, performances, utilisation; une matrice de décision est proposée.

ZUSAMMENFASSUNG

Zweck dieses Berichtes ist es, das Deckensystem weitgespannter Hängebrücken mit Fachwerkaussteifung zu optimalisieren. Verschiedene Deckensysteme werden vom Standpunkt der Ausführung, der Kosten, des Gewichts und der Nutzung anhand einer Entscheidungsmatrix überprüft.