Zeitschrift: IABSE congress report = Rapport du congrès AIPC = IVBH Kongressbericht

Band: 8 (1968)

Artikel: Dynamic wind response of guyed masts

Autor: Shears, Michael / Felippa, C.A. / Clough, R.W.

DOI: https://doi.org/10.5169/seals-8878

Nutzungsbedingungen

Die ETH-Bibliothek ist die Anbieterin der digitalisierten Zeitschriften auf E-Periodica. Sie besitzt keine Urheberrechte an den Zeitschriften und ist nicht verantwortlich für deren Inhalte. Die Rechte liegen in der Regel bei den Herausgebern beziehungsweise den externen Rechteinhabern. Das Veröffentlichen von Bildern in Print- und Online-Publikationen sowie auf Social Media-Kanälen oder Webseiten ist nur mit vorheriger Genehmigung der Rechteinhaber erlaubt. Mehr erfahren

Conditions d'utilisation

L'ETH Library est le fournisseur des revues numérisées. Elle ne détient aucun droit d'auteur sur les revues et n'est pas responsable de leur contenu. En règle générale, les droits sont détenus par les éditeurs ou les détenteurs de droits externes. La reproduction d'images dans des publications imprimées ou en ligne ainsi que sur des canaux de médias sociaux ou des sites web n'est autorisée qu'avec l'accord préalable des détenteurs des droits. En savoir plus

Terms of use

The ETH Library is the provider of the digitised journals. It does not own any copyrights to the journals and is not responsible for their content. The rights usually lie with the publishers or the external rights holders. Publishing images in print and online publications, as well as on social media channels or websites, is only permitted with the prior consent of the rights holders. Find out more

Download PDF: 26.11.2025

ETH-Bibliothek Zürich, E-Periodica, https://www.e-periodica.ch

VI

Dynamic Wind Response of Guyed Masts

Mâts haubannés dans le vent turbulent

Abgespannte Maste unter dem Einfluß von turbulentem Wind

MICHAEL SHEARS C.A. FELIPPA R.W. CLOUGH J. PENZIEN
University of California, Berkeley

1. INTRODUCTION

Engineering interest in the analysis of guyed masts was stimulated by the introduction of radio transmission, and one of the earliest contributions, by Walmsley (1) in 1924, was concerned with the static loads applied to stay-ropes used to support wireless masts. Problems associated with the dynamic behavior of cables have received much attention in classical texts for well over a century. The motion of inextensible loose chains and the small oscillations of tight elastic strings have been discussed extensively by Routh (2) in 1860, and Rohrs (3) in 1851. Probably the earliest detailed method for the static and dynamic analysis of guyed masts under the action of wind forces, however, was due to Kolouŝek (4) in 1947. In more recent years, due largely to the increased heights and importance of telecommunications masts, there has been considerable interest in this field of study, with notable contributions by Cohen (5), Dean (6) and Davenport (7).

In the past, the static analysis of guyed masts has usually been accomplished by treating the shaft as a continuous beam-column resting on non-linear, elastic supports using solution techniques based on modified slope-deflection equations. Generally, the solution methods employed and the description of the system have been rather cumbersome and not entirely suited to the analysis of the fully integrated guyed mast system. For this reason, various approximations have been made in both the guy cable representation and in the manner of application of the steady wind forces, the result being the evolution of a number of similar methods of analysis differing only in the number, or degree of approximations to the real system.

The dynamic analysis of guyed masts has received very limited attention to date, and those methods proposed are often quite unsuitable for any detailed investigation of the dynamic responses to fluctuating wind excitations. An exception was the report by Hartmann and Davenport (8) in 1966, which described the spectral response analysis of a tall, guyed mast utilizing a single degree of freedom, discrete parameter model to represent the cables. Even in this case, however, the effect of the wind on the cables was neglected in the analysis.

The purpose of this paper is to report on detailed computer studies made using a suitable discretized model to investigate the response characteristics

of guyed masts under the action of turbulent wind influences (9). The model representing the system is fully integrated geometrically and structurally, and may be used to study both the static and dynamic behavior of the system. Estimates of the dynamic responses of a tall, guyed mast are evaluated deterministically using actual wind velocity data, and non-deterministically using the theory of random vibrations and incorporating available wind velocity spectra. A comparison between the deterministic and non-deterministic responses, and a discussion of the relative merits of the two procedures are also presented.

2. THE CABLE MODEL

2.1 Finite Element Discretization

The real cable is represented by an assembly of one-dimensional cable elements (CE) interconnected at nodal points located on the initial cable profile, utilizing a lumped mass idealization for the dynamic analysis.

The stiffness properties of the CE are derived in a local cartesian system $(\bar{x},\bar{y},\bar{z})$ where $\bar{x}$ is the chord axis and $\bar{y}$ is in the plane of the element. Three degrees of freedom are defined at each node: the two displacements $\bar{u}$ and $\bar{v}$ in the $\bar{x}$ and $\bar{y}$ directions, respectively, and the rotation $\bar{\varphi}$ about $\bar{z}$. The CE stiffness matrix includes the conventional axial stiffness and the geometric stiffness, which accounts for the effect of the cable tension T. The secant CE axial stiffness (along the $\bar{x}$ axis), which results from the assumption that the CE profile is a shallow parabola, is given by (5)

$$k_A = \frac{\Delta T}{\Delta c} = \frac{1}{c}\left[\frac{1}{EA} + \frac{W_n^2}{24}\,\frac{(2T+\Delta T)}{(T+\Delta T)^2\,T^2}\right]^{-1} \tag{2-1}$$

where c is the chord length of the element, W_n is the total applied load normal to the chord, E is the elastic modulus and A the cross-sectional area of the cable material. Since ΔT and Δc are not known a priori, the tangent axial stiffness

$$k_A = \frac{dT}{dc} = \frac{1}{c}\left[\frac{1}{EA} + \frac{W_n^2}{12T^3}\right]^{-1} \tag{2-2}$$

is used for each linearized step of the iterative static solution (Section 3.3). The (6 x 6) CE stiffness matrix is completed with the geometric stiffness, which is obtained by assuming a cubic $\bar{v}(\bar{x})$ variation defined in terms of the nodal values of $\bar{v}$ and $\bar{\varphi}$.

2.2 Cable Frequency Studies

In order to test the convergence properties of the finite element idealization as the number of elements is increased, the lowest natural frequencies of a single cable were computed and compared with the results obtained from a series solution for an assumed overall parabolic profile. Before presenting the numerical examples, the parabolic cable solution is outlined for clarification.

Parabolic Cable Series Solution: The undamped equation of motion of an end-fixed, inclined parabolic cable under a uniform dead load per unit of chord length w, (Fig. 1), vibrating about the parabolic equilibrium position y(x) is given by

$$\frac{w}{g}\,\ddot{v} = T\,\frac{d^2v}{dx^2} + dT\,\frac{d^2y}{dx^2} \tag{2-3}$$

By expressing v(x,t) as a Fourier sine series

$$v(x,t) = \sum_{n=1}^{\infty} Y_n(t)\,\sin\frac{n\pi x}{c} \tag{2-4}$$

and taking account of orthogonality, Eq. (2-3) may be reduced to two infinite systems of ordinary differential equations representing the symmetric and antisymmetric modes (8,9) of vibration.

For the symmetric modes (n odd)

$$\ddot{Y}_n + \bar{\omega}_n^{\,2}\left(1 + \frac{\zeta}{n^4}\right) Y_n + \bar{\omega}_n^{\,2}\,\zeta \sum_{\substack{s=1,3\ldots \\ s\neq n}}^{\infty} \frac{1}{n^3 s}\, Y_s = 0 \qquad (2\text{-}5)$$

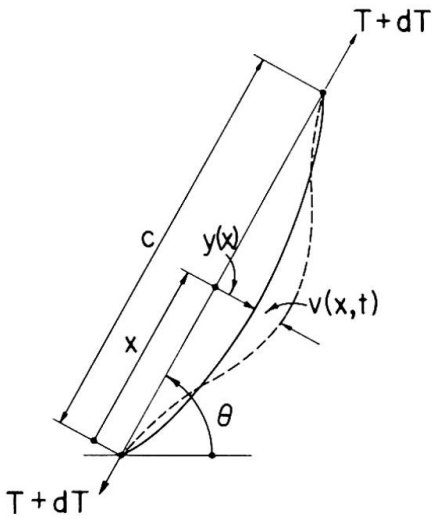

FIG. 1

where $\bar{\omega}_n = n\,\pi\sqrt{(Tq/w\,c^2)}$ is the n-th taut string frequency and

$$\zeta = \frac{8\,A\,E\,w^2\,c^2}{\pi^4\,T^3}\cos^2\theta \qquad (2\text{-}6)$$

is a dimensionless constant providing the cross coupling between the symmetric modes and hereafter termed the "cable parameter". The symmetric mode natural frequencies ω_n can be computed from (2-5) using standard eigenvalue techniques. For a relatively taut cable, the cross coupling becomes negligible and ω_n approaches $\bar{\omega}_n$, whereas for a slack cable considerable coupling develops, especially between the first (n = 1) and second (n = 3) symmetric modes.

For the antisymmetric modes (n even), the frequency equation is identical to that of a taut string ($\zeta = 0$) and $\omega_n = \bar{\omega}_n$ (n = 2,4....).

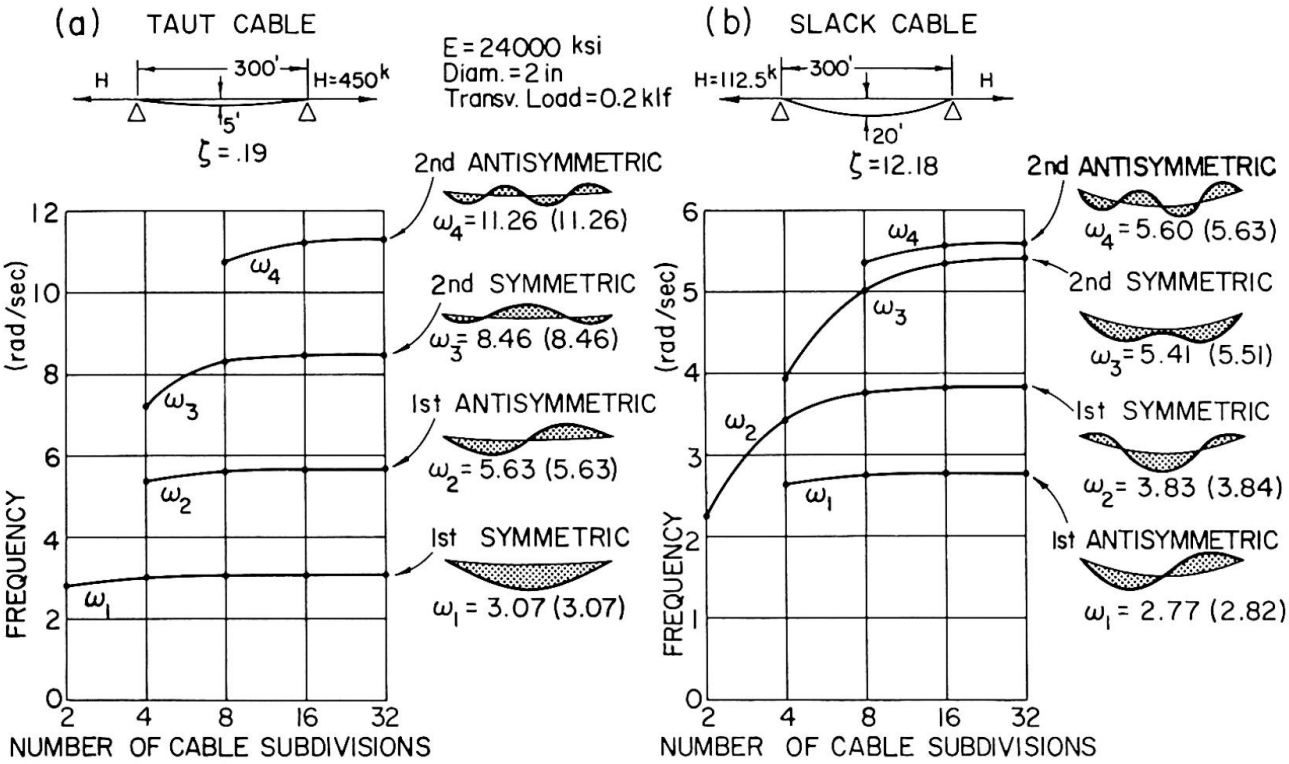

FIG. 2 CABLE MODEL FREQUENCY CONVERGENCE STUDY

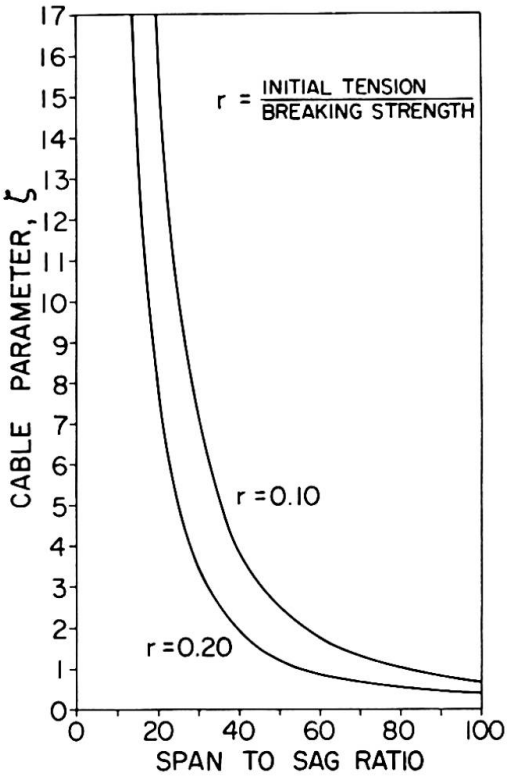

FIG. 3

Comparison of Results: A 300 ft. horizontal cable under $w = 200$ plf was selected for the comparison. Two midspan sags were assumed: 5 ft. for the taut case ($\zeta = 0.19$) and 20 ft. for the slack case ($\zeta = 12.16$). Fig. 2 presents the results of the finite element frequency analysis for various subdivisions. The convergence is very fast in the case of the taut cable, and slower for the slack cable. The frequencies obtained for the parabolic cable are indicated in parentheses.

Other Guy Cable Characteristics: To further ensure that the cable model adequately represents the properties of guy cables, a numerical investigation of the fundamental frequencies was performed for a series of cables with chord lengths varying between 250 and 1000 ft. and initial tension levels between 10-20% of the breaking strength. The range of cables investigated was intended to include most of the cables likely to be used in the construction of guyed masts. A curve illustrating the relationship between the cable parameter ζ and the chord length to normal sag ratio is given in Fig. 3, which clearly shows that most practical guy cables lie within a closely bounded region. It was also found that for a given initial tension all cables considered fell on the same curve, indicating that the cable parameter is a direct measure of the tautness irrespective of the cable dimensions. The frequencies calculated using a six-element cable model were found to agree with the analytic solutions obtained from (2-4) to within 5%, see Fig. 4, indicating that the commonly assumed parabolic cable profile is satisfactory for most guy cables.

3. THE GUYED MAST MODEL

3.1 Finite Element Discretization

In order to complete the finite element idealization of a guyed mast structure, a beam-column element (BCE) is required. The BCE stiffness matrix is also generated in the local element system $(\bar{x},\bar{y},\bar{z})$ defined in Section 2.1, and includes both the axial and geometric stiffness contributions (as described for the CE) plus the flexural stiffness in the $\bar{x}$-$\bar{y}$ plane. The bending stiffness is obtained by assuming a fifth-order $\bar{v}(\bar{x})$ expansion in terms of the transverse displacements $\bar{v}$, rotations $\bar{\varphi}$ and curvatures $\partial\bar{\varphi}/\partial\bar{x}$ at the end nodes, the latter two degrees of freedom being eliminated by static condensation. Elements with variable section and inertia may be specified.

The BCE mass discretization results from static lumping of the element mass at both end nodes.

The complete structure can be idealized as an assembly of both cable and beam-column finite elements. The stiffness matrix, nodal force vector and lumped mass matrix of the discretized structure are obtained by direct superposition of the stiffness matrices, applied nodal forces and lumped masses, respectively, of the individual elements, after a transformation to common or global coordinate systems at all interconnecting nodal points.

In this investigation, the guyed mast structure was assumed to be symmetric and symmetrically loaded with respect to a vertical X-Y plane, where Y is the

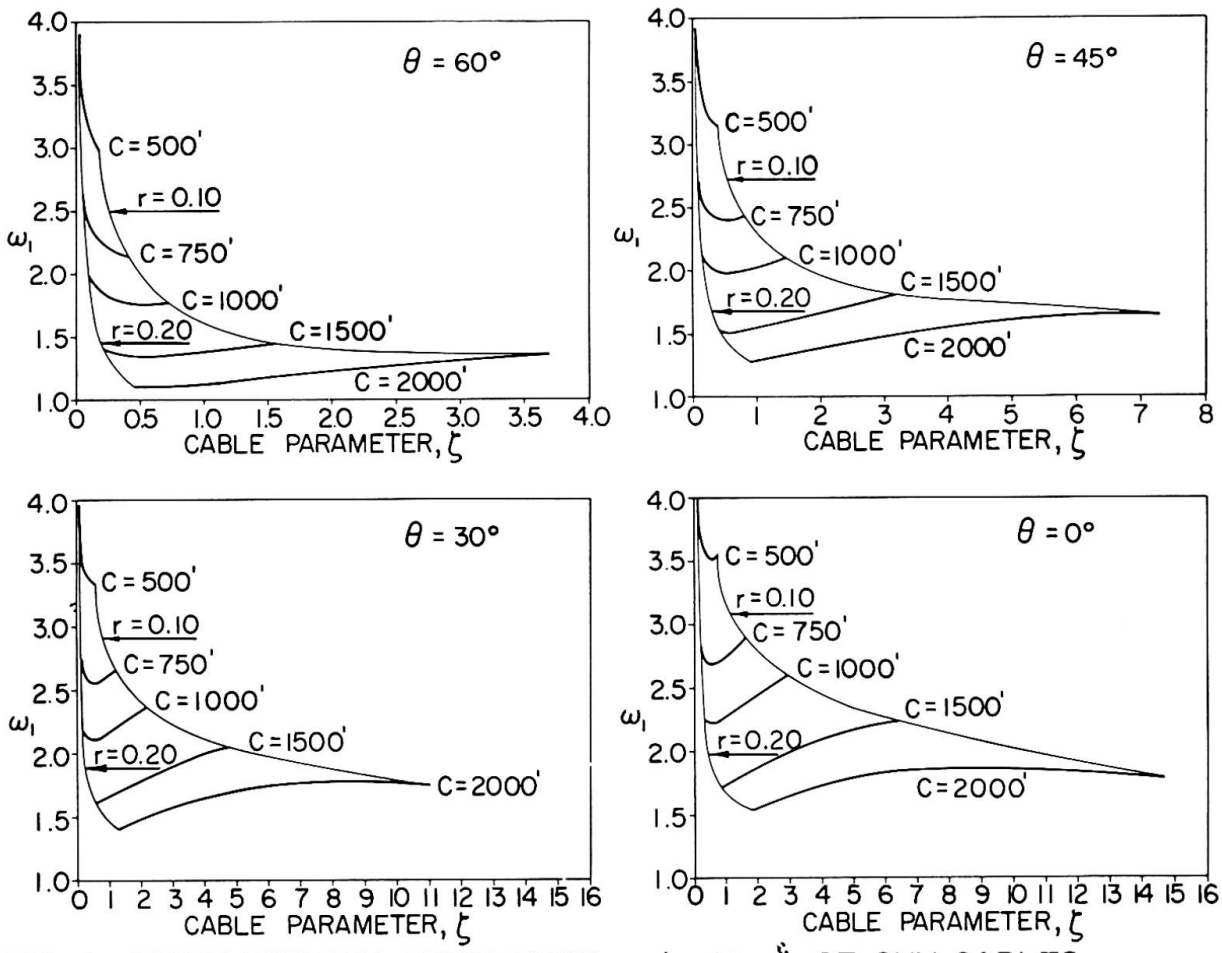

FIG. 4 FIRST NATURAL FREQUENCY ω_1 (rad/sec) OF GUY CABLES INCLINED AT $\theta°$, CROSS-COUPLING BETWEEN MODES INCLUDED

vertical shaft axis. A finite element may represent either a single structural component in the X-Y plane, or two members initially located in two vertical planes X'-Y and X"-Y symmetrically placed with respect to the X-Y plane, and which remain symmetrically located after deformation. Thus the actual three-dimensional problem is reduced to a two-dimensional problem.

3.2 Loading Actions

Static Loading: In the static analysis, the structure is subjected to its own weight and the mean or steady wind pressure. The dead load is converted to nodal forces by static lumping at the nodal points. The wind forces are calculated by assuming that the wind acts in the direction of the horizontal X axis defined in Section 3.1, and that the mean velocity $\bar{V}_x(Y)$ at any height Y is given by the well-known power law (10). The wind pressure on each finite element is assumed to be uniform and determined by the velocity at the midheight and the geometric and aerodynamic properties of the member (exposed width and drag-lift coefficients). The resultant element wind forces are then lumped at the end nodes. In addition, concentrated wind forces intended to represent certain concentrated areas such as insulators, reflectors, etc., may be specified at any nodal point.

Gust Loading for Deterministic Dynamic Analysis: The deterministic gust analysis requires the specification of a wind velocity history from a set of digitized velocity records $V_x(t,Y_i)$ taken at several heights Y_i. This input can be conveniently reduced to a dimensionless or "reduced" pressure fluctuation

$$\mu_x(t,Y) = \frac{q_x(t,Y)}{\bar{q}_x(Y)} - 1 \qquad (3\text{-}1)$$

where q_x is the dynamic pressure corresponding to V_x and $\bar{q}_x$ is the average over the sample used. Interpolation may be used if $Y \neq Y_i$. In order to simplify the analysis procedure in the present case, however, a reduced pressure fluctuation $\bar{\mu}_x(t) = \mu_x(t,Y_m)$ computed from a sample taken at height Y_m was used over the entire structure as a multiplier on the actual static wind force distribution. This assumption is probably conservative, since the vertical correlation decay is neglected.

Gust Loading for Non-deterministic Dynamic Analysis: The following assumptions were made for the non-deterministic gust analysis:

(a) The horizontal gust component $V_{gx}(t,Y) = V_x(t,Y)-\bar{V}_x(Y)$ is a stationary Gaussian random variable and small with respect to $\bar{V}_x$.
(b) The cross-spectral density function proposed by Danvenport (10) and described by Ferry Borges in the theme paper (11) represents the vertical correlation of horizontal gustiness.
(c) The drag and lift coefficients are independent of the vibration frequencies.
(d) The peak intensity level (σ-level) of the response components is a function of both the response spectra and the wind sample duration, as proposed by Davenport (12), but extended for multi-degree of freedom systems.

3.3 Analysis Procedure

This Section describes briefly the main steps of the computer analysis of the discretized structure.

Static Solution: Because of the presence of the guy cables, the structure is geometrically non-linear. The static equilibirum position (SEP) under the static loading is determined by a matrix iterative procedure of Newton's type. A typical linearized step includes the following sequence of operations:

(a) Calculate the external nodal forces on the present geometry and the internal nodal force resultants from the element forces (axial forces and bending moments) determined at the previous step (in the first step, the only internal element forces are the initial cable tensions specified on the initial geometry). The unbalanced nodal forces are the difference of the external and internal forces.
(b) Evaluate the tangent structural stiffness and solve for incremental nodal displacements, which, when added to the previous displacements, define the new structure configuration.
(c) Calculate the internal element forces in the new geometry (for each cable element, the cubic equation (2-1) must be solved for T). Then repeat steps (a) through (c).

The convergence to the SEP can be conveniently measured by the magnitude of the unbalanced nodal forces corresponding to the unconstrained nodal displacements. Usually 4 to 6 iteration cycles are found to be sufficient for most problems.

Frequency-mode Analysis: For the dynamic analysis, the structure is assumed to oscillate linearly about the SEP. This assumption permits standard matrix mode-superposition techniques to be used for both the deterministic and the non-deterministic cases. A set of "m" significant lowest frequencies ω_r and associated vibration modes $\{\Phi_r\}$ is obtained by solving the vibration eigenvalue problem:

$$[K]\{\Phi_r\} = \omega_r^2 \; [M]\{\Phi_r\} \qquad (r = 1,2...m) \qquad (3\text{-}2)$$

where $[K]$ is the tangent stiffness matrix at the SEP and $[M]$ the lumped mass matrix. This is accomplished by reducing (3-2) to a standard eigenvalue problem form after elimination of all rotational degrees of freedom.

Deterministic Gust Analysis: The normal response amplitudes $Y_r(t)$ are obtained by solving the modal response equations

$$\ddot{Y}_r(t) + 2\,\gamma_r\omega_r\dot{Y}_r(t) + \omega_r^2\,Y_r(t) = P_r\,\bar{\mu}_x(t) \qquad (r = 1,2,\ldots m) \qquad (3\text{-}3)$$

where $P_r = \langle R_w^T \rangle \{\Phi_r\}$ are the static generalized wind forces calculated using the static wind forces $\{R_w\}$ at the SEP, and γ_r are the modal damping coefficients. The time history of any desired quantity $z(t)$ about its SEP value is given by

$$z(t) = \sum_{r=1}^{m} B_{zr}\,Y_r(t) \qquad (3\text{-}4)$$

where B_{zr} are the modal influence coefficients of z. The program generates time response plots of nodal displacements, nodal accelerations and internal element forces, as well as the peak or envelope values.

Non-deterministic Gust Analysis: The gust response spectra of the discretized structural model are evaluated for each contributing vibration mode using standard random vibration techniques (13). This procedure requires a double integration to be performed over the structure, the integration being reduced to a double summation over the model elements using a Gauss-Legendre numerical quadradure formula for a set of conveniently spaced frequencies (from $\omega = 0$ to $\omega = 2\omega_r$). The modal variances σ_r^2 are then computed by numerical integration of the response spectra over the significant frequency range. A program option allows the cable elements to be excluded from the analysis for the purposes of comparison.

The variance or mean square oscillation σ_z^2 of any desired quantity $z(t)$ is easily calculated by mean square superposition of the modal variances weighted by the modal influence coefficients B_{zr}. Finally, σ_z is multiplied by the peak value or σ-level of $z(t)$, which is computed as proposed by Davenport (12).

4. GUYED MAST EXAMPLE

4.1 Description

A tall guyed mast having four sets of three-way guy cables and a cantilever antenna was chosen for the present example. The dimensions and structural properties of the system, see Fig. 5, were based on the CFPL mast described by Hartmann and Davenport (8) with certain modifications.

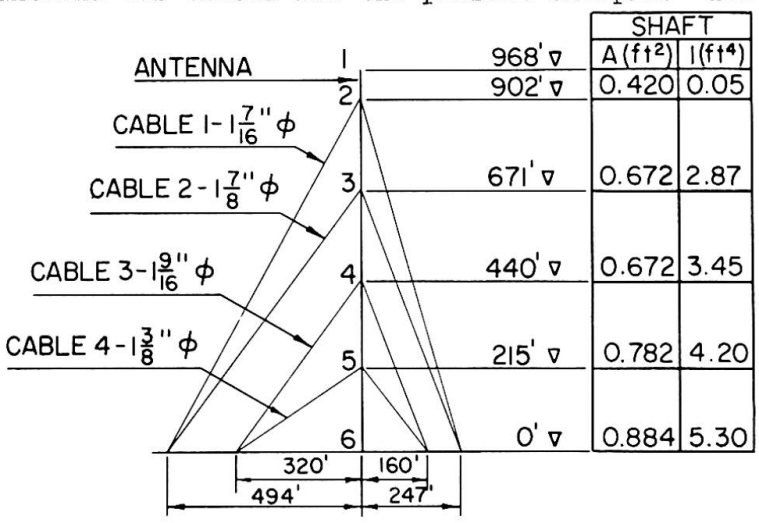

FIG. 5 MAST PROPERTIES AND GEOMETRY

The fluctuating wind velocities used in the deterministic dynamic studies were obtained from the NASA 150-meter meteorological tower located at the Kennedy Space Center (KSC) in Florida. The data was recorded on magnetic tape and then digitized at 10 records per second (14), although in the present investigation data intervals of 0.5 seconds only were used, the velocity at

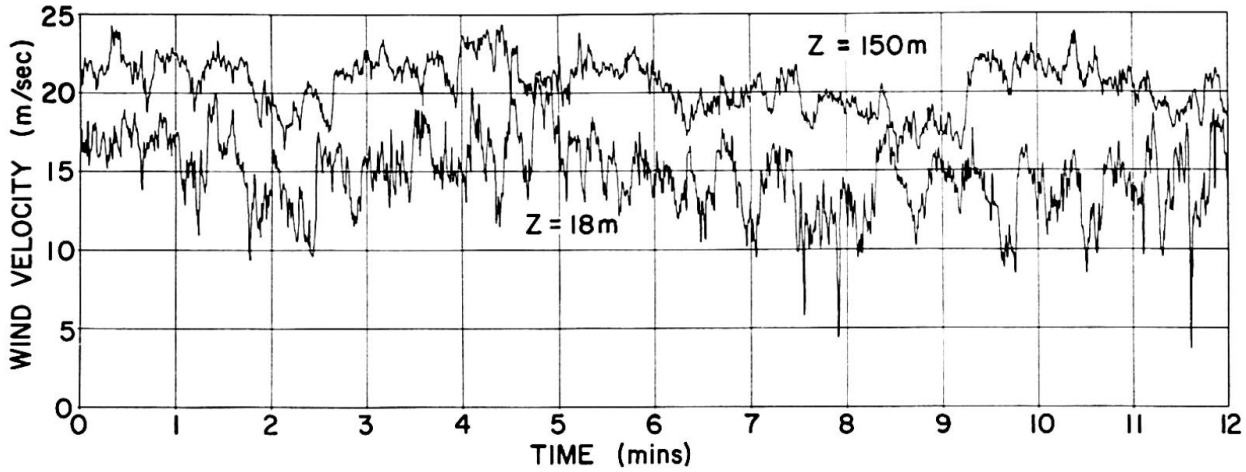

FIG. 6 WIND VELOCITY RECORD FROM 18m AND 150m KSC MET. TOWER

each interval being the average of five digitized values. A plot of a 12 minute segment of the wind velocity record measured at the 18- and 150-meter levels is shown in Fig. 6, which clearly indicates the increase of the mean velocity with height and the randomly fluctuating nature of the gusts. It is also noted that the fluctuations are somewhat more intense at the lower elevation, and, for this reason, the wind records used to evaluate the system responses were taken from the 150-meter level, corresponding to about mid-height of the mast. Wind velocity inputs of about 2 minutes deviation were considered sufficient to give estimates of the responses, since the longest periods of the system rarely exceed 5 seconds.

The mast was assumed to be located in open country, for which the mean wind velocity was taken to follow a 1/7th power law variation with height. The parameters required to completely define the cross-spectral density of the horizontal wind velocities proposed by Davenport (10), namely the ground drag coefficient and exponential decay coefficient, were taken to be 0.001 and 7, respectively.

4.2 Refinement of the Guyed Mast Model

To avoid excessive computer analysis time, tests were made to determine the least refined model, which still gives uniform responses compared with more refined models. Three models were considered, see Fig. 7, with the properties shown in Fig. 5 and also with the shaft elements considerably stiffened. The initial cable tension level was taken to be about 11.5% (standard) of the breaking strengths for each test, and the mean wind velocity +75 mph at the 10-meter elevation. The viscous damping of the system in this and subsequent tests was taken to be 0.6% of critical for all modes.

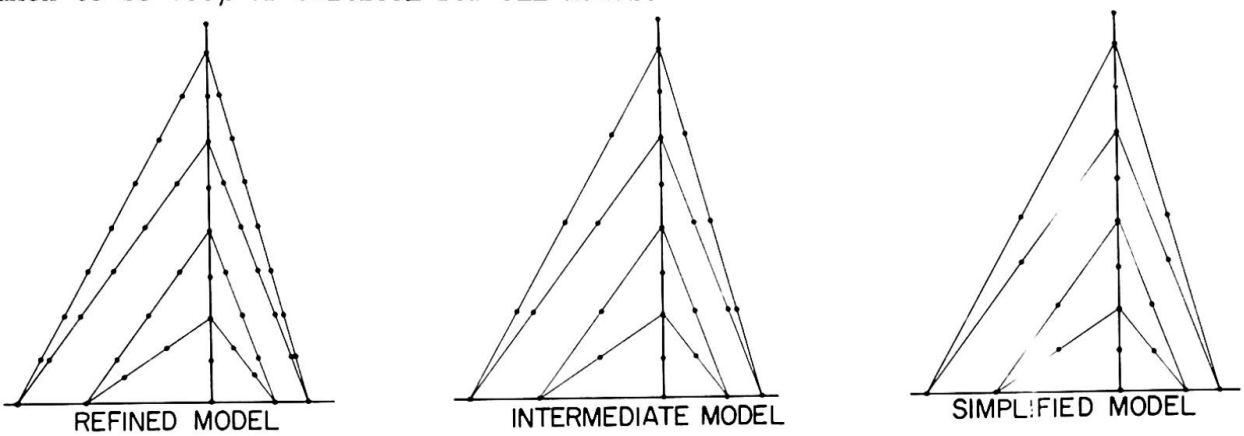

FIG. 7 NODAL POINT ARRANGEMENTS FOR GUYED MAST MODELS

The results of the static and deterministic analyses showed that the intermediate model responded in a uniform manner compared to the refined model (which should be used to obtain the responses in the final analysis of a real problem), whereas the simplified model responses suffered considerable variability. The intermediate model was then used to study the influence of a number of parameters on the system responses, with a saving in computer time of the order of 60% for a full static and frequency-mode analysis, and up to about 35% for a deterministic dynamic analysis. The parameters studied include shaft stiffness, initial cable tensions, the mean and fluctuating wind velocities, and the wind on the cables.

4.3 Results of the Guyed Mast Studies

Static Responses: The results of numerous tests on the intermediate model for the influencing parameters outlined above indicate that the shaft responses are controlled largely by the cable sizes and spatial arrangements, and, once these have been selected, the shaft displacement and bending moments are little influenced by changes in the initial cable tensions or the shaft stiffness. Increasing the cable sizes by 50% resulted in reductions in the shaft displacements of up to 30% for identical initial tensions. The shaft moments in this case were redistributed, but still little changed in magnitude, indicating that the flexural behavior of the shaft is a relatively unimportant design parameter for a given cable arrangement. For initial tensions between 10-20% of the breaking strengths it was also found that, although the guy cables exhibit nonlinear properties locally, the overall guyed mast behavior is closely linear for wind velocities up to about 60 mph, beyond which linearity is lost.

In the above tests the $\bar{z}$-displacements (see 2.1) of the CE were neglected, and further tests using a revised program to include these effects showed that the shaft displacements had been underestimated for positive winds and overestimated for reversed winds, resulting in a loss of linearity of the system for positive winds. The influence of the $\bar{z}$-displacements of the CE emphasizes the importance of including the wind on the cables in any analysis.

Deterministic Dynamic Responses: Increasing the shaft stiffness was found to have little effect on the cable modes of the system, since the static cable tensions at the SEP are themselves unaffected, but has a direct influence on the predominant shaft mode frequencies, which results in some increase in the shaft displacements and a rapid increase in the shaft bending moments. Increasing the initial cable tensions, however, had the opposite effect and the predominant cable modes only were influenced. The result in this case was a slight overall reduction in the shaft displacements and moments, although these effects were somewhat variable, particularly for the antenna cantilever, which tends to act as an independent appendage and has a considerable influence on the shaft modes.

As stated earlier, a two minute fluctuating wind input taken from the 150-meter level of the KSC met. tower was used to evaluate the deterministic dynamic responses in the tests to study the various influencing parameters. The responses due to records of one, two and three minutes duration taken from the 150-meter level are listed in Table 1 for comparison, since it may be postulated that, for a record of duration less than 20 minutes or so, the probability of higher intensity wind gusts occuring in the record increases with increased length of the record. To illustrate the effect of the apparent increased gustiness at lower elevations of the KSC tower data, the responses due to a two-minute input taken from the 30-meter level are also tabulated. In each case the responses are based on the SEP due to a +75 mph mean wind velocity at 10-meters, with the $\bar{z}$-displacements neglected. Effective "gust factors" based on response are presented for comparison with the non-deterministic results and the quasistatic procedures commonly used in design offices. Shaft axial force and cable tension responses are not tabulated, since the dynamic

contributions were found to be generally small, usually less than 30% of the corresponding static maxima.

Table 1

Response	KSC met. wind record (duration/elevation)			
	2 min/30m	1 min/150m	2 min/150m	3 min/150m
x-acceleration				
*Node 1	0.71g	0.27g	0.31g	0.35g
2	0.29g	0.09g	0.10g	0.10g
x-displacement (ft)				
Node 1	3.93	1.29	1.77	1.94
2	1.48	0.59	0.76	0.88
3	0.92	0.28	0.57	0.59
4	0.81	0.24	0.42	0.47
Gust factor on x-displacement				
Node 1	2.88	1.62	1.85	1.93
2	2.11	1.45	1.57	1.66
3	2.16	1.35	1.72	1.74
4	2.59	1.47	1.82	1.92
Bending moment (kft)				
Node 2	355.0	128.5	161.0	171.5
3	530.5	230.5	271.0	291.9
4	316.0	114.5	127.0	194.0
5	441.5	119.0	201.5	222.9
Gust factor on bending moment				
Node 2	4.64	2.32	2.65	2.76
3	2.16	1.50	1.60	1.64
4	2.68	1.61	1.68	2.03
5	2.76	1.47	1.80	1.89

*See Fig. 5

Due to the coupling between the system modes and the dependence of modal sequence on the overall system stiffness, it is difficult to preselect the important modes influencing the responses. Further tests to study the modal contributions showed that the choice of modes for the dynamic response calculations can be made on the basis of the magnitudes of the modal generalized forces, and this procedure was adopted for the non-deterministic analyses.

Non-deterministic Dynamic Responses: The non-deterministic responses of the intermediate model listed in Table 2 were evaluated from the SEP's due to the +75 mph basic mean wind velocity, first with the $\bar{z}$-displacements of the cables neglected, for comparison with the deterministic results in Table 1, and then with the $\bar{z}$-displacements included. Also tabulated are the mean peak intensity levels (see 3.2) and the effective "gust factors" for each response. The axial force responses are again omitted, due to the relatively small dynamic influences involved.

The effect of ignoring the $\bar{z}$-displacements of the cables is seen to overestimate the system responses by up to about 20%, although it was found in further tests that the corresponding responses may be underestimated by as much as 40% if the wind pressure on the cables is ignored completely in both the static and dynamic analyses. It is noted from Table 2, however, that the shaft acceleration responses are not affected by the $\bar{z}$-displacements of the cables, since they are mainly influenced by the predominant antenna-shaft modes.

The shaft displacement responses obtained by neglecting the $\bar{z}$-displacements of the cables are seen to compare fairly closely with the corresponding deterministic responses due to the 30-meter wind record, which is clearly conservative since the same gustiness is assumed over the full height of the

mast. The average gustiness of the 150-meter record provides the more realistic deterministic responses, which tend to maximum values somewhat less than the non-deterministic responses.

Table 2

Response	z-displacements neglected	P*	z-displacements included	P*
x-acceleration				
Node 1	0.57g	4.42	0.57g	4.42
2	0.26g	4.49	0.26g	4.50
x-displacement (ft)				
Node 1	3.60	4.35	3.28	4.37
2	1.62	4.34	1.34	4.37
3	0.41	4.44	0.37	4.45
4	0.33	4.45	0.31	4.46
Gust factor on x-displacement				
Node 1	2.73		1.95	
2	2.22		1.55	
3	1.52		1.33	
4	1.65		1.52	
Bending moment (kft)				
Node 2	280.7	4.42	278.5	4.42
3	458.5	4.42	375.0	4.40
4	221.0	4.52	209.0	4.51
5	228.5	4.49	229.5	4.49
Gust factor on bending moment				
Node 2	3.88		3.81	
3	2.00		1.58	
4	2.18		2.02	
5	1.91		1.84	

*P = peak intensity level (sigma level)

5. CONCLUSIONS

The finite element model is shown to provide a suitable representation of the guyed mast and allows detailed static and dynamic analyses to be performed on a fully integrated system. Several hitherto ignored factors, such as the wind effect on the cables and concentrated areas, and the use of the deflected static equilibrium position as the mean dynamic configuration, can be naturally included. The behavior of the actual structure can be arbitrarily approximated by a mesh refinement process limited only by the capacity of the computer program, and the incorporated static and kinematic assumptions.

The computer program has been used in the analysis of a number of complex guyed mast systems, but can also treat arbitrary two dimensional structures, including suspension bridges. Moreover, the methods described in this paper can be extended to include any conceivable structural system by constructing the appropriate finite element models.

The deterministic responses due to a single wind record sample depend on the duration of the sample, as well as the atomospheric conditions at the time and place of measurement. These observations suggest that wind record samples are not a useful means of determining the probable maximum responses, unless an ensemble of such samples is used and the resulting responses evaluated on a statistical basis. This procedure is tedious and uneconomic, and, due to the random nature of the wind gusts, the use of stochastic procedures is clearly the more rational approach. Deterministic methods, however, do have useful

applications in providing time-histories of response, particularly if used in conjunction with actual response measurements.

REFERENCES

(1) Walmsley, T., "Length, tension, and sag of stay ropes." Proc. I.C.E., No. 19, 1924 (paper 4481).

(2) Routh, R. J., "Advanced rigid dynamics" (Macmillan 1st edn. published 1860).

(3) Rohrs, J. H., "On the oscillations of a suspension chain." Trans. Cam. Phil. Soc., 9, 1851.

(4) Kolouŝek, V., "Solution Statique et dynamique des pylones d'antennae haubanes." Pub. IABSE, Vol. 8, 1947.

(5) Cohen, E. and Perrin, H., "Design of multilevel guyed towers." ASCE Journ., Vol. 83, ST5, Sept. 1957.

(6) Dean, D. L., "Static and dynamic analysis of guy cables." ASCE Journ., Vol. 87, ST1, Jan. 1961.

(7) Davenport, A. G. and Steels, G. N., "Dynamic behavior of massive guy cables." ASCE Journ., Vol. 91, ST2, April 1965.

(8) Hartmann, A. J. and Davenport, A. G., "Comparison of the predicted and measured dynamic response of structures to wind." Eng. Sc. Res. Report ST-4-66, Univ. Western Ontario, London, Canada, 1966.

(9) Shears, M., "Static and dynamic behavior of guyed masts." Univ. of California Structural Engineering Lab. Research Report No. 68-6, 1968.

(10) Davenport, A. G., "The application of statistical concepts to the wind loading of structures." Proc. Inst. Civil Engrs., Vol. 19, 1961.

(11) Ferry Borges, J., "Dynamic Loads." Theme VI paper. VII Congress of IABSE, New York, Sept. 1968.

(12) Davenport, A. G., "Note on the distribution of the largest value of a random function with application to gust loading." Proc. Inst. Civil Engrs., Vol. 28, 1964.

(13) Crandall, S. H. and Mark, W. D., "Random vibrations in mechanical systems." (Academic Press) 1963.

(14) Scoggins, J. R., "Some properties of low altitude atmospheric turbulence at Cape Kennedy, Florida." NASA TMX-53640, July 1967.

SUMMARY

This paper reports detailed computer studies made using a suitable discretized model to investigate the response characteristics of guyed masts under the action of turbulent wind influences. The actual structure is idealized in the form of a finite element model, which is fully integrated geometrically and structurally. Estimates of the dynamic responses of a tall, guyed mast are evaluated deterministically using actual wind velocity records and non-deterministically using the theory of random vibrations and incorporating available wind velocity spectra. A comparison between the deterministic and non-deterministic responses, and a discussion of the relative merits of the two procedures is presented.

RÉSUMÉ

On présente ici une technique detaillée d'analyse sur ordinateurs de la réponse de mâts haubannés sous l'action du vent turbulent. La structure est représentée par un modèle discret d'éléments finis qui tient compte de tous les paramètres géométriques et structuraux actuels. La réponse dynamique d'un mât haubanné élevé est obtenue de deux façons: par une méthode déterministique utilisant des vitesses du vent réellement enregistrées; et par un modèle statistique qui utilise la théorie des vibrations aléatoires et des spectres de réponse au vent probables. On compare les solutions obtenues par les deux méthodes et l'on discute leurs mérites respectifs.

ZUSAMMENFASSUNG

Dieser Bericht enthält detaillierte Computer-Analysen des charakteristischen Verhaltens abgespannter Maste unter dem Einfluss von turbulentem Wind. Das eigentliche Bauwerk ist durch endliche Elemente idealisiert, das alle geometrischen und baulichen Parameter enthält. Das dynamische Verhalten von hohen abgespannten Masten wurde mit zwei Methoden ermittelt: Die erste basiert auf eigentlichen Windgeschwindigkeitsmessungen und die zweite verwendet statistische Methoden unter Zuhilfenahme von vorhandenen Windgeschwindigkeitsverteilungen. Ein Vergleich dieser beiden Verfahren mit ihren jeweiligen Vor- und Nachteilen wird erläutert.

Leere Seite
Blank page
Page vide