**Zeitschrift:** IABSE congress report = Rapport du congrès AIPC = IVBH Kongressbericht

**Band:** 6 (1960)

**Artikel:** Strengthening a steel column with initial stress (Sigma 0) by means of steel of a superior grade

**Autor:** Böhmer, Johan F.

**DOI:** https://doi.org/10.5169/seals-7050

**Nutzungsbedingungen**

Die ETH-Bibliothek ist die Anbieterin der digitalisierten Zeitschriften auf E-Periodica. Sie besitzt keine Urheberrechte an den Zeitschriften und ist nicht verantwortlich für deren Inhalte. Die Rechte liegen in der Regel bei den Herausgebern beziehungsweise den externen Rechteinhabern. Das Veröffentlichen von Bildern in Print- und Online-Publikationen sowie auf Social Media-Kanälen oder Webseiten ist nur mit vorheriger Genehmigung der Rechteinhaber erlaubt. Mehr erfahren

**Conditions d'utilisation**

L'ETH Library est le fournisseur des revues numérisées. Elle ne détient aucun droit d'auteur sur les revues et n'est pas responsable de leur contenu. En règle générale, les droits sont détenus par les éditeurs ou les détenteurs de droits externes. La reproduction d'images dans des publications imprimées ou en ligne ainsi que sur des canaux de médias sociaux ou des sites web n'est autorisée qu'avec l'accord préalable des détenteurs des droits. En savoir plus

**Terms of use**

The ETH Library is the provider of the digitised journals. It does not own any copyrights to the journals and is not responsible for their content. The rights usually lie with the publishers or the external rights holders. Publishing images in print and online publications, as well as on social media channels or websites, is only permitted with the prior consent of the rights holders. Find out more

**Download PDF:** 22.01.2026

**ETH-Bibliothek Zürich, E-Periodica, https://www.e-periodica.ch**

## Discussion libre - Freie Diskussion - Free Discussion

### Strengthening a Steel Column with Initial Stress ($\sigma_0$) by Means of Steel of a Superior Grade

*Renforcement d'une colonne métallique, sollicitée par des contraintes initiales ($\sigma_0$), à l'aide d'un acier de résistance plus élevée*

*Verstärkung einer durch eine Grundspannung ($\sigma_0$) beanspruchten Stahlstütze mit einem Stahl höherer Festigkeit*

JOHAN F. BÖHMER
tekn. lic., Kjessler & Mannerstråle AB, Bridge department, Stockholm, Sweden

The usual design practice on allowable stresses can hardly be used in this case and may give rise to uneconomical dimensions because of the initial stress. The computation is therefore based on the theory of plasticity considering directly the safety of the structure.

Primary yielding of the initially stressed steel is unimportant, and the safety factor must be related either to *repeated yielding or complete failure.*

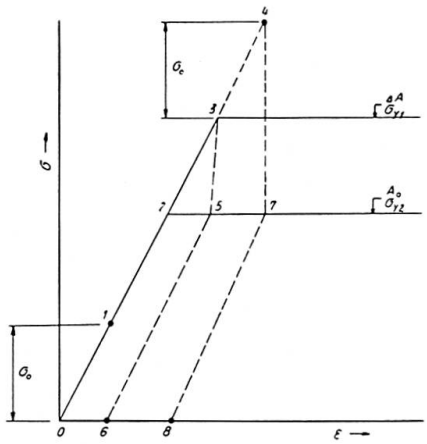


$A_0$ = Original section, with $\sigma_{Y2}$
$\Delta A$ = Additional section, with $\sigma_{Y1}$ } $\sigma_{Y1} > \sigma_{Y2}$
Ev. Initial stress For $A_0$ = $\sigma_0$

Fig. 1.

Three factors make the problem complicated: Initial stress, the difference in steel grade and buckling.

We first ignore buckling and regard the column as being in tension. See the stress-strain diagram Fig. 1.

When loaded up to the ultimate carrying capacity and then unloaded, the stress for $\Delta A$ will follow 0–3–0; for $A_0$ with initial stress $\sigma_0$ it will follow 1–2–7–8 and for no initial stress 0–2–5–6. After primary yielding the initial stress has vanished.

The safety factors are:

$$\text{against primary yielding:} \quad s_1 = \left(1 - \frac{\sigma_0}{\sigma_{y2}}\right) \frac{\sigma_{y2}}{\sigma_{nom}}, \tag{1a}$$

$$\text{against repeated yielding:} \quad s_2 = \frac{\sigma_{y2}}{\sigma_{nom}}, \tag{1b}$$

$$\text{against complete failure:} \quad s_3 = \frac{1 + \frac{\Delta A}{A_0} \frac{\sigma_{y1}}{\sigma_{y2}}}{1 + \frac{\Delta A}{A_0}} \frac{\sigma_{y2}}{\sigma_{nom}}. \tag{1c}$$

Eq. (1c) gives the relation between the two safety factors $S_2$ and $S_3$. The question which of them that is to be taken as the nominal safety factor is not important for this discussion, and in any case the difference is not great.

For the Swedish steel grade SIS 1310 ($\sigma_{y2} = 2200$) reinforced by SIS 1510 ($\sigma_{y1} = 3100$) and $\frac{\Delta A}{A_0} = 1$, $s_2/s_3 = 0{,}83$.

## The Exact Method

For the combined section $(A_0 + \Delta A)$ we introduce the "*average yield stress*"

$$\bar{\sigma}_y = \frac{A_0 \sigma_{y2} + \Delta A \, \sigma_{y1}}{A_0 + \Delta A}. \tag{2}$$

buckling is now taken into account. The critical stress is determined partly by the pure elastic buckling stress $\sigma_e$ and partly by the yield stress $\sigma_y$. Purely elastic buckling is independent of the steel grade and is determined by the slenderness ratio.

The effect of varying $\sigma_y$ while the section remains constant is seen in Fig. 2.

The connection between $\sigma_e$, $\sigma_y$ and $\sigma_{cr}$ is given by among others AAS-JAKOBSEN and DUTHEIL. According to DUTHEIL we have [1]):

$$\sigma_{cr}^2 - \sigma_{cr} \left[\sigma_y + \frac{\pi^2 E}{\lambda^2} + \frac{4.8\, \pi^2 E}{10^5}\right] = -\sigma_y \frac{\pi^2 E}{\lambda^2}. \tag{3}$$

---

[1]) DUTHEIL's Eq. (3) is based on assumptions as to initial curvature of the column, and the nominal safety factor can therefore be chosen a constant independent of slenderness ratio.

By inserting $\sigma_y$ from (2) in (3) we get the corresponding critical stress (the indexes (⁻) have been ommitted) and the critical load is given by:

$$P_{cr} = \sigma_{cr}(A_0 + \Delta A). \tag{4}$$

The exact method is not very practical because of the quadratic Eq. (3).

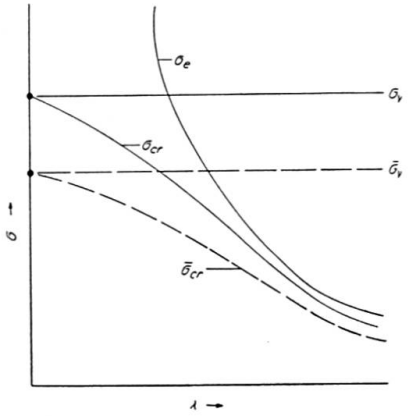


Fig. 2.

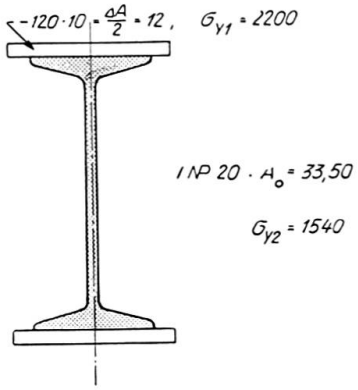


Fig. 3.

## The Approximate Method

For the total section in yielding we have

$$P_y = A_0 \sigma_{y2} + \Delta A \sigma_{y1} = (A_0' + \Delta A)\sigma_{y1}, \tag{5}$$

where $$A_0' = A_0 \frac{\sigma_{y2}}{\sigma_{y1}} \quad \text{and} \quad (A_0' + \Delta A)$$

is the *reduced area*. Consequently the critical stress for the higher grade can be used.

This stress is taken from some curve or specification based on Eq. (3) for the actual steel grade and the critical load is given by:

$$P_{cr} = (A_0' + \Delta A)\sigma_{cr1}. \tag{6}$$

In order to compare the two methods, a numerical example is given below.

## Numerical Example

A rolled steel joist INP 20 is reinforced with 2 plates — 120.10 as shown Fig. 3. The original section is assumed to have a very low yield stress and is to be reinforced by steel SIS 1310.

*a) Exact method*

Slenderness ratio $\lambda = 60$

$$\frac{\sigma_{y2}}{\sigma_{y1}} = 0.7, \qquad A_0' = 33.5 \cdot 0.7 = 23.5$$

the reduced area: $A_0' + \Delta A = 23.5 + 24.0 = 47.5$; the average yield stress

$$\bar{\sigma}_y = \frac{A_0' + \Delta A}{A_0 + \Delta A} \sigma_{y1} = \frac{47.5}{57.5} \cdot 2200 = 1819.$$

DUTHEIL's Eq. (3) gives with $\sigma_y = 1819$ and $\lambda = 60$

$$\sigma_{cr} = 1575$$

and

$$P_{cr} = 1575 \cdot 57.5 = 90562.$$

*b) Approximate method*

$$A_0' + \Delta A = 47.5.$$

According to the appropriate curve based on DUTHEIL's Eq. (3) we have for

$$\sigma_{y1} = 2200 \text{ and } \lambda = 60$$
$$\sigma_{cr} = 1762$$
$$P_{cr} = 1762 \cdot 47.5 = 83695,$$

the difference is 6867 kg i. e. 7,6 % on the safe side.

In Table 1 below, $P_{cr}$ has been calculated also for $\lambda = 100$ and 140. When $\lambda \to 0$ the methods give the same result; when $\lambda \to \infty$, $\sigma_{cr} \to \sigma_e$ and the error in $P_{cr}^{appr.} \to \sigma_e (A_0 - A_0')$.

*Table 1. $P_{cr}$ according to exact and approximate method.*

| Slenderness ratio $\lambda$ | Exact method | | | Approx. method | | | Difference | |
|---|---|---|---|---|---|---|---|---|
| | $\sigma_{cr}$ | $A_0 + \Delta A$ | $P_{cr}$ | $\sigma_{cr}$ | $A_0' + \Delta A$ | $P_{cr}$ | $\Delta$ kg | $\Delta$ % |
| 60 | 1575 | 57,5 | 90562 | 1762 | 47,5 | 83695 | 6867 | 7,6 |
| 100 | 960 | 57,5 | 55200 | 1091 | 47,5 | 51823 | 3377 | 6,1 |
| 140 | 593 | 57,5 | 34098 | 645 | 47,5 | 30638 | 3460 | 10,2 |

## Notations

$A_0$ original cross section of steel column (with the lower steel grade),

$A_0'$ reduced original cross section $\left(= A_0 \frac{\sigma_{y2}}{\sigma_{y1}}\right)$,

$\Delta A$ additional reinforcing cross section (with the higher steel grade),

| | |
|---|---|
| $S_1, S_2, S_3$ | safety factors against primary yielding, repeated yielding and complete failure, |
| $P_{cr}$ | ultimate (critical) load in compression, |
| $P_y$ | ultimate tensile load, |
| $\sigma_0$ | initial stress of steel column (stress in $A_0$), |
| $\sigma_y$ | yield stress, |
| $\sigma_{y1}$ | yield stress of $\Delta A$, |
| $\sigma_{y2}$ | yield stress of $A_0$, |
| $\sigma_{nom}$ | allowable stress for the combined section $(A_0 + \Delta A)$, |
| $\bar{\sigma}_y$ | average yield stress for the combined section, |
| $\sigma_e$ | purely elastic buckling stress $\left(= \frac{\pi^2 E}{\lambda^2}\right)$, |
| $\sigma_{cr}$ | ultimate (critical) stress in compression (e. g. $\bar{\sigma}_{cr}$), |
| $\sigma_{cr1}$ | ultimate (critical) stress in compression; the higher steel grade, |
| $\lambda$ | slenderness ratio $\left(= \frac{l_t}{i}\right)$. |


## Summary

Using the theory of plasticity as a bases, formulæ are developed for the safety factors against repeated yielding and complete failure. Two methods for calculating the carrying capacity of a reinforced column are developed, one exact and one approximate. The approximate method gives values always on the safe side as demonstrated in a numerical example.

## Résumé

En se basant sur la théorie de la plasticité, l'auteur développe des formules servant à déterminer le coefficient de sécurité pour des sollicitations répétées dépassant la limite élastique et le coefficient de sécurité à la rupture.

Il s'agit de deux méthodes: l'une exacte, l'autre approximative, qui permettent de calculer la charge de rupture d'une colonne renforcée. L'exemple numérique montre que la méthode approximative donne des valeurs approchées par défaut; la sécurité réelle est donc supérieure.

## Zusammenfassung

Mittels der Plastizitätstheorie wurden die Sicherheitsfaktoren für wiederholtes Fließen und für die Tragfähigkeit gefunden. Es wurden zwei Verfahren, ein exaktes und ein angenähertes, für die Traglastberechnung einer verstärkten Säule entwickelt. Das Näherungsverfahren gibt Werte auf der sicheren Seite, wie aus dem Zahlenbeispiel hervorgeht.

Leere Seite
Blank page
Page vide