Zeitschrift: IABSE congress report = Rapport du congrès AIPC = IVBH Kongressbericht

Band: 5 (1956)

Artikel: Critical remarks on the effect of bent-up bars and stirrups in reinforced concrete beams

Autor: Johansen, K.W.

DOI: https://doi.org/10.5169/seals-6119

Nutzungsbedingungen

Die ETH-Bibliothek ist die Anbieterin der digitalisierten Zeitschriften auf E-Periodica. Sie besitzt keine Urheberrechte an den Zeitschriften und ist nicht verantwortlich für deren Inhalte. Die Rechte liegen in der Regel bei den Herausgebern beziehungsweise den externen Rechteinhabern. Das Veröffentlichen von Bildern in Print- und Online-Publikationen sowie auf Social Media-Kanälen oder Webseiten ist nur mit vorheriger Genehmigung der Rechteinhaber erlaubt. Mehr erfahren

Conditions d'utilisation

L'ETH Library est le fournisseur des revues numérisées. Elle ne détient aucun droit d'auteur sur les revues et n'est pas responsable de leur contenu. En règle générale, les droits sont détenus par les éditeurs ou les détenteurs de droits externes. La reproduction d'images dans des publications imprimées ou en ligne ainsi que sur des canaux de médias sociaux ou des sites web n'est autorisée qu'avec l'accord préalable des détenteurs des droits. En savoir plus

Terms of use

The ETH Library is the provider of the digitised journals. It does not own any copyrights to the journals and is not responsible for their content. The rights usually lie with the publishers or the external rights holders. Publishing images in print and online publications, as well as on social media channels or websites, is only permitted with the prior consent of the rights holders. Find out more

Download PDF: 18.02.2026

ETH-Bibliothek Zürich, E-Periodica, https://www.e-periodica.ch

V a 1

Critical remarks on the effect of bent-up bars and stirrups in reinforced concrete beams

Kritische Bemerkungen über die Wirkung von aufgebogenen Eisen und Bügeln

Crítica do efeito das armaduras oblíquas e dos estribos em vigas de betão armado

Critique de l'effet des barres obliques et des étriers dans les poutres en béton armé

PROF. DR. K. W. JOHANSEN
Copenhagen

In a reinforced concrete beam we have the compression zone and the tensile zone. When the tensile strength of the concrete is neglected, the tensile zone is the reinforcement alone.

Between these zones we have the shear zone. The compression force and the tensile force constitute a couple, the bending moment. When

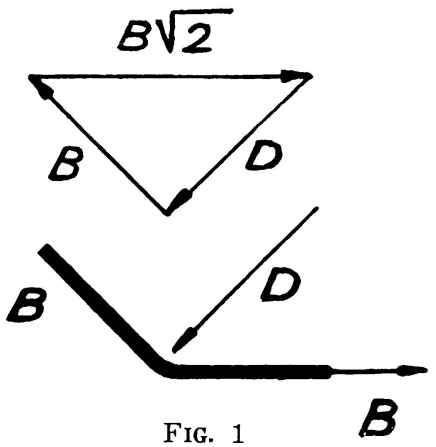

FIG. 1

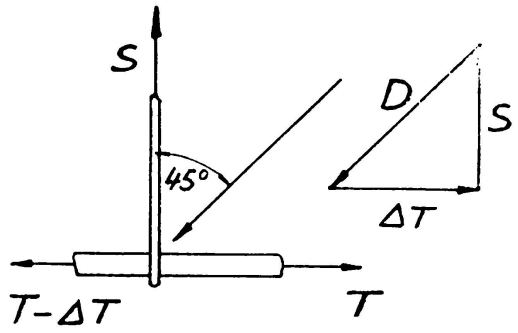

FIG. 2

the moment varies, so do these forces and the difference of the compressive forces is transmitted to the shearing zone, where it equalizes the difference in the tensile forces also transmitted to the shearing zone.

theory deals with the strength of the three zones mentioned and the trans-
theory deals with the strengh of the three zones mentioned and the trans-
mission of force between the zones. Very important is the transmission of the forces from the tensile zone, the reinforcement, to the shear zone. Let us consider a bent up bar fully utilized before the bend. After the bend the tensile force is diminished by the force B in the bar, and not B $\sqrt{2}$ as postulated in the orthodox theory. The bent up bar and an oblique compression force in the shear zone might transmit B $\sqrt{2}$, but 0,41 B must be transmitted from the other bars and at the bend, as the first mentioned bar is assumed to be fully utilized. But this very local transmission through the concrete is evidently impossible.

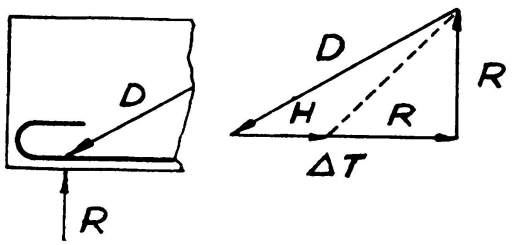

FIG. 3

A bent up bar transmits only its own force, independently of the angle of bending.

The last mentioned fact is very valuable in designing in cases where bending at 45° may give practical troubles.

The transmission of force by stirrups is attained by tension S in the stirrup and an oblique compression D in the concrete. When the direction of this compression is assumed to be 45°, (corresponding to the coefficient of friction) the force transmitted is equal to the force S in the stirrups in agreement with the orthodox theory.

At the end of a simply supported beam the reaction R acts as a stirrup and consequently transmits the force R. This is completely neglected in the orthodox theory. The hooks transmit a force H. The load on the top of cantilever beams also acts as stirrups. A uniformly distributed load w transmits forces wx (x distance from free end) given by a straight line (ordinate W = = wl at the end).

Assuming a cantilever beam divided in two parts sliding on each other, the greatest slip is found at the free end and not at the fixed end. Consequently shear reinforcement at the fixed end is only of little value, but at the free end it will be efficient. In the same way, in a continuous, beam the greatest slip is found at the inflexion point which will be the best location for shear reinforcement. The postulate of the orthodox

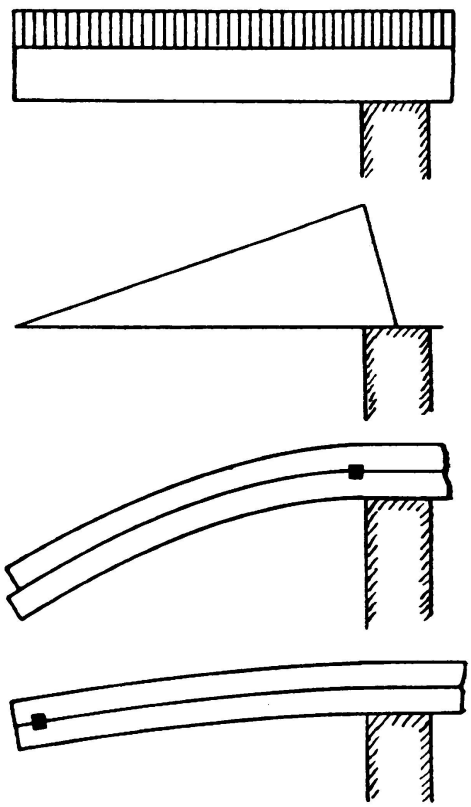

FIG. 4

theory, that the shear reinforcement should be placed according to the shearing forces is evidently incorrect.

The neccessary amount of the tensile force T is given by the bending moment. The shear reinforcement at any place must not diminish the tensile force by more than what corresponds to the decrease in bending moment, that is the T-line corresponding to the bending moment must be inside the T-line corresponding to the shear reinforcement.

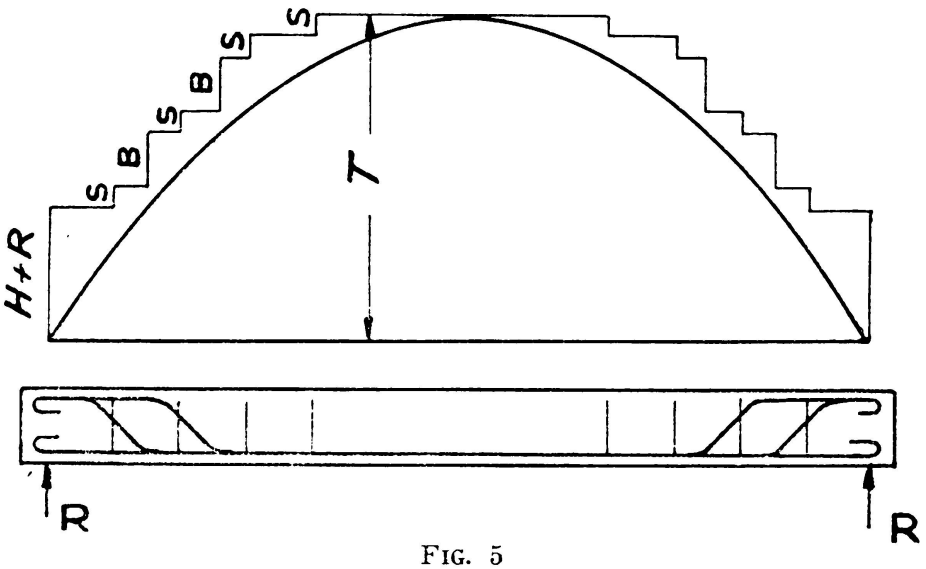

FIG. 5

The shear reinforcement may be placed ad libitum between the «free points» and the end in a simply supported beam, between the «free points» and the free end in a cantilever beam and between the «free points» and the bending moment zero in a continuous beam. In the latter case the bars ought to be totally discharged at the zero, as the stressed part of a bar may not continue into the compression zone on the other side of the zero. The shear reinforcement may be concentrated at the free end in a cantilever beam and at the moment zero, the inflexion point, in a continuous beam just as the above geometrical considerations have shown. It is of some practical value to know that the shear reinforcement must not be concentrated at the support of a continuous beam, where the column reinforcement may already give trouble for correctly casting the concrete.

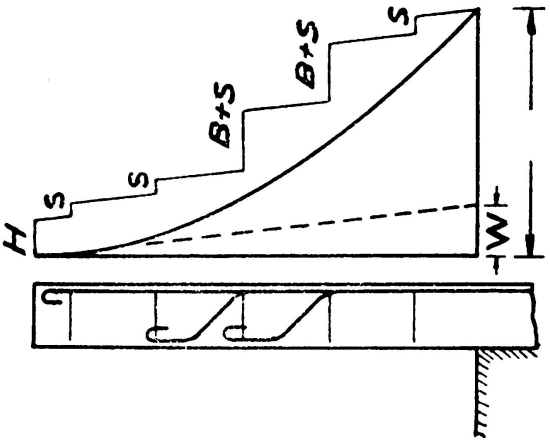

FIG. 6

In a beam without shear reinforcement or where all shear reinforcement is concentrated at the end, the variation of the bending moment

is caused by varying arm of the moment which leads to the arch effect if the reinforcement is anchored in a reliable way. This depends mainly on the hooks and the reaction and tests show that a safe limit of the anchoring force for bars with hooks is

$$A = H + R = 3{,}5\ c\ a_0 + R$$

(c = concrete's compressive strength in bending, a_0 = area of bars at the support, R = reaction). The first term is the effect of the hooks, the last the effect of the reaction corresponding to a coefficient of friction equal to 1.

In a simply supported beam with an area of reinforcement a, area of bent up bars b, area of stirrups s and yield stress r, the greatest tensile

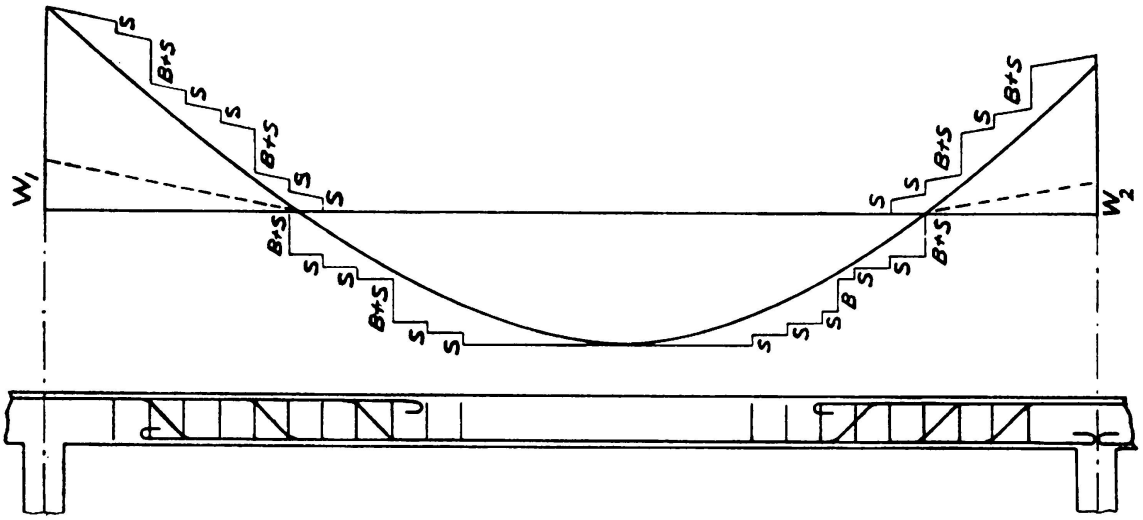

FIG. 7

force is ra which the bent up bars reduce by rb and the stirrups by rs (b and s correspond to a half part). At the support the force is reduced to

$$A = r\ (a - b - s) = 3{,}5c\ (a - b) + R$$

or

$$s + \frac{R}{r} = (a - b)\ (1 - 3{,}5\ \frac{c}{r}).$$

giving the amount of stirrups.

In a cantilever beam the load L on the upper side substitutes the reaction R and then

$$s + \frac{L}{r} = (a - b)\ (1 - 3{,}5\ \frac{c}{r}).$$

In a continuous beam the part between the support and the moment zero is treated as a cantilever beam and the part between the zeros as a simply supported beam with R = O. Only the shear reinforcement at the zeros

can be considered common for both parts. Consequently it is more economical to concentrate it there. Fig. 10 shows the extreme case where all shear reinforcement is concentrated at the moment zeros.

Shear tests are always more or less confused by the tensile strength of the concrete, neglected in the theories, but existing in reality, but many

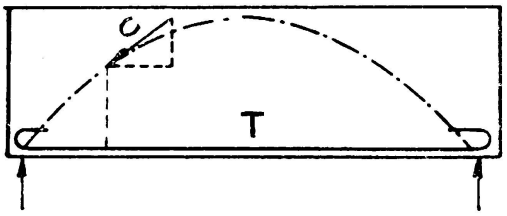

FIG. 8

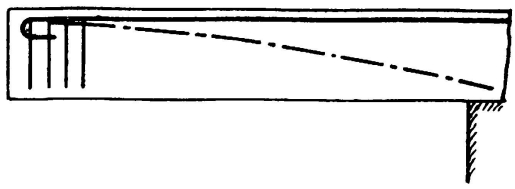

FIG. 9

tests verify this theory and it is a well known fact, that the orthodox theory is not verified by the tests. In this connection it should be emphazised that most of the efforts to get an agreement between tests and theories in the case of concrete shall be in vain as long as the strength

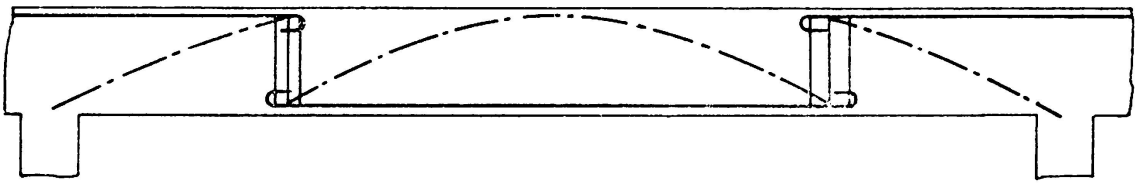

FIG. 10

of the concrete is expressed by only one magnitude, the cube strength or similar. The simplest condition of failure in concrete involves three magnitudes: coefficient of interior friction, compressive and tensile strength.

SUMMARY

It is shown and verified by test results that the orthodox conception of the effect of shear reinforcement has serious faults. The main points are:

1. The effect of bent up bars does not correspond to $\sqrt{2}$ x (area) but only to 1 x (area) and is independent of the angle.
2. The distribution of the shear reinforcement does not correspond to the distribution of the transverse forces.
3. The reactions at the beam ends actuate as stirrups.

ZUSAMMENFASSUNG

Es wird gezeigt und durch Versuchsresultate nachgewiesen, dass die bisherige Vorstellung von der Wirkung der Schubsicherung ernst zu nehmende Mängel aufweist. Die wichtigsten davon sind:

1. Die Wirkung der aufgebogenen Eisen ist nicht proportional zu $\sqrt{2}$ mal der Fläche sondern nur direkt proportional und zudem unabhängig vom Winkel.
2. Die Verteilung der Schubsicherung entspricht nicht der Verteilung der Querkräfte.
3. Die Reaktionen an den Balkenenden wirken als Bügel.

RESUMO

Resultados de ensaios mostram e verificam que o conceito ortodoxo do efeito das armaduras de corte apresenta erros graves. Os pontos principais são:

1. O efeito de armaduras oblíquas corresponde, não a $\sqrt{2}$ x (área), mas apenas a 1 x (área) e é independente do ângulo.
2. A distribuição das armaduras de corte não corresponde à distribuição dos esforços transversos.
3. As reações nas extremidades das vigas actuam como estribos.

RÉSUMÉ

Les résultats d'essais montrent et vérifient que la conception orthodoxe de l'effet des armatures de cisaillement présente de sérieuses erreurs. Les points principaux sont:

1. L'effet des barres obliques ne correspond pas à $\sqrt{2}$ x (surface) mais à peine à 1 x (surface) et est indépendant de l'angle.
2. La distribution de l'armature de cisaillement ne correspond pas à la distribution des efforts tranchants.
3. Les réctions aux appuis des poutres agissent comme des étriers.