Zeitschrift: IABSE congress report = Rapport du congrès AIPC = IVBH Kongressbericht

Band: 4 (1952)

Artikel: Experimental and theoretical investigation of a flat slab floor

Autor: Hageman, J.G.

DOI: https://doi.org/10.5169/seals-5032

Nutzungsbedingungen

Die ETH-Bibliothek ist die Anbieterin der digitalisierten Zeitschriften auf E-Periodica. Sie besitzt keine Urheberrechte an den Zeitschriften und ist nicht verantwortlich für deren Inhalte. Die Rechte liegen in der Regel bei den Herausgebern beziehungsweise den externen Rechteinhabern. Das Veröffentlichen von Bildern in Print- und Online-Publikationen sowie auf Social Media-Kanälen oder Webseiten ist nur mit vorheriger Genehmigung der Rechteinhaber erlaubt. Mehr erfahren

Conditions d'utilisation

L'ETH Library est le fournisseur des revues numérisées. Elle ne détient aucun droit d'auteur sur les revues et n'est pas responsable de leur contenu. En règle générale, les droits sont détenus par les éditeurs ou les détenteurs de droits externes. La reproduction d'images dans des publications imprimées ou en ligne ainsi que sur des canaux de médias sociaux ou des sites web n'est autorisée qu'avec l'accord préalable des détenteurs des droits. En savoir plus

Terms of use

The ETH Library is the provider of the digitised journals. It does not own any copyrights to the journals and is not responsible for their content. The rights usually lie with the publishers or the external rights holders. Publishing images in print and online publications, as well as on social media channels or websites, is only permitted with the prior consent of the rights holders. Find out more

Download PDF: 03.02.2026

ETH-Bibliothek Zürich, E-Periodica, https://www.e-periodica.ch

AII 3

Experimental and theoretical investigation of a flat slab floor

Recherches théoriques et expérimentales sur une dalle-champignon

Experimentelle und theoretische Untersuchungen an einer Pilzdecke

IR. J. G. HAGEMAN
Research Engineer T.N.O., Delft

INTRODUCTION

It is known that a three-dimensional stress distribution in a homogeneous elastic material, which is moreover isotropic and meets the requirements of Hooke's law, is established by three linear simultaneous differential equations with linear boundary conditions. Only a few exact solutions of these equations are known and the procedure of finding the approximations by iteration is complicated and takes a lot of time.

The economical use of monolithic reinforced-concrete construction could be improved by a clear insight into the occurring three-dimensional stress distributions.

Reinforced concrete does not meet the premises leading to the above three simultaneous differential equations.

It appears that the development of the technique of reinforced concrete surpassed the existing calculation methods. These have even failed in such a way that the general application of scientific concrete structures, e.g. flat slab floors, is hampered or rather involves a waste of material which, if the insight into the occurring stress distribution had been clearer, could in many cases have been limited.

EMPIRICAL RESEARCH

In order to be able to determine if the differences between theory and practice are caused by the adopted premises, which refer to the properties of the materials, or by the methods of calculation which are applied to this kind of construction, it was decided to use a steel model for the investigations, because, it may be supposed, steel does follow the premises made in the theoretical considerations.

The floor slab (4,500 × 2,940 × 9 mm.), consisting of 15 square panels, is supported by 24 steel columns (figs .1), each with a column capital shaped as an equilateral hyperboloid rotated on its vertical asymptote. This shape may be considered as the average column capital.

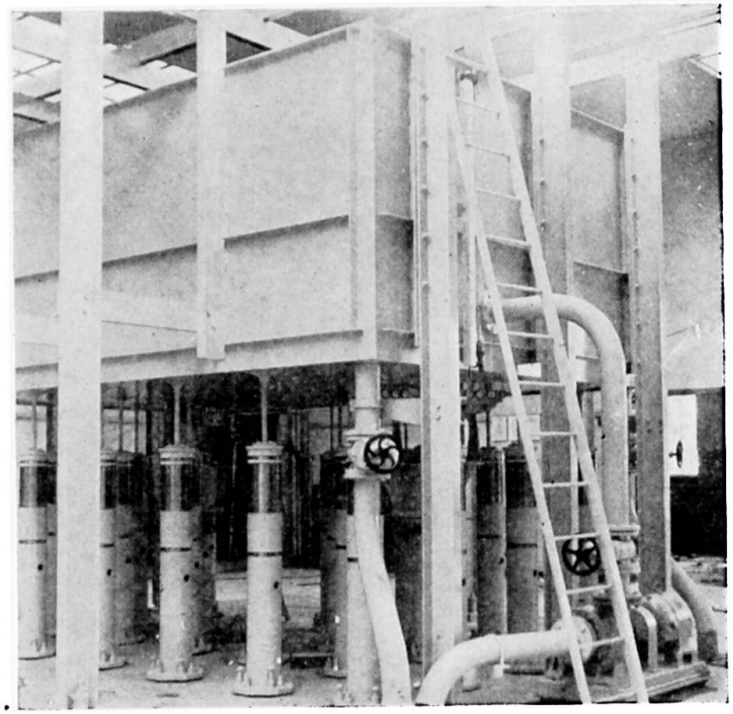

Fig. 1(*a*)

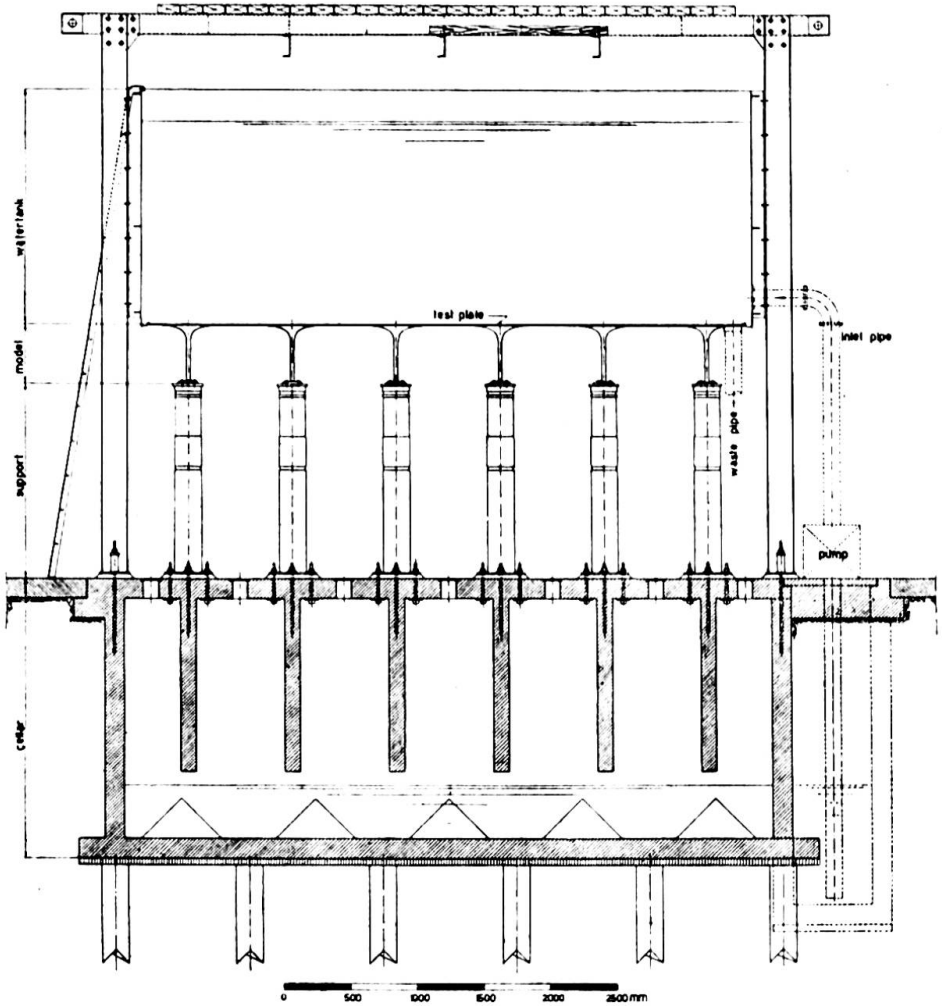
water tank
model
support
cellar
test plate
waste pipe
inlet pipe
pump
0
500
1000
1500
2000
2500 mm

Fig. 1(*b*)

The overhanging length has been chosen in such a way that the occurring moments due to a uniformly distributed load in the floor slab approximate to the moments in a flat slab floor infinitely stretched in both directions.

The connections in the column and in the floor slab are welded electrically. To limit the resisting welding stresses as much as possible, the floor slab was annealed twice.

The floor slab also acts as the bottom of a tank. Into this tank water can be pumped to gain a uniformly distributed load.

Deformation of the floor due to action of sides of the tank during loading is counteracted by means of a flexible connection between sides and bottom. These sides are fixed to a frame. By jacking against this frame a concentrated loading on the floor slab is accomplished.

The model is mounted on a rigidly constructed base of reinforced concrete, which also serves as a storage tank for the water.

Uniformly distributed loads

First the deflection plane of the central panel due to a uniformly distributed load was determined by means of dial gauges with a measuring precision of 0·01 mm. These gauges are mounted on a structure revolving round a column (fig. 2).

The exactness of these measurements was about 2 to 3 % of the greatest deflection.

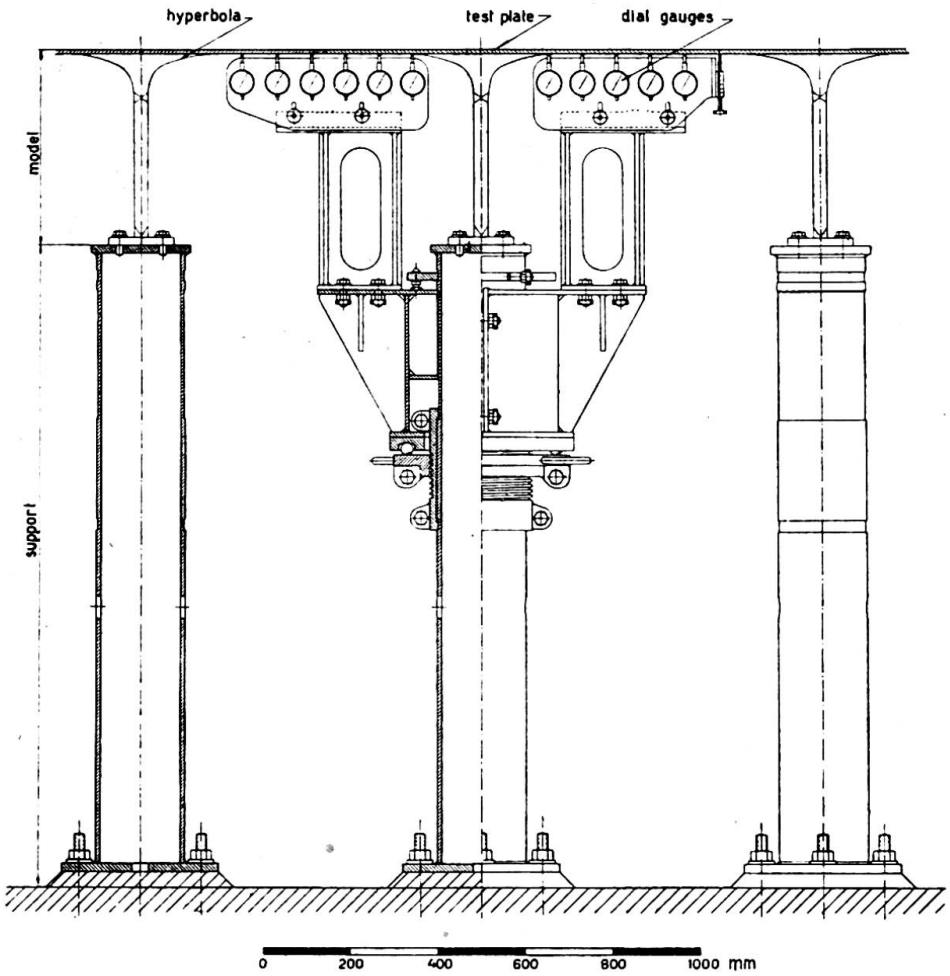

Fig. 2

However, by determining the bending moments by differentiating the deflections twice, the inexactitude may be great.

A more accurate determination raises the practical difficulty that, generally, very accurate dial-gauges command only a very small measuring range, so that the dial-gauges must be adjusted several times during the test. Therefore a specially designed instrument is used for the determination of the bending moments. This instrument gives the size of the curvature, namely the term $w_1+w_2-2w_0$. It is known that the curvature k at the point A_0, provided the values for Δx are not too high, equals

$$\frac{w_1+w_2-2w_0}{\Delta x^2} \text{ (fig. 3).}$$

Due to a special design it is possible to determine simultaneously the curvatures in two directions (fig. 4) at right angles to each other.

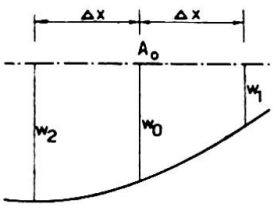

Fig. 3

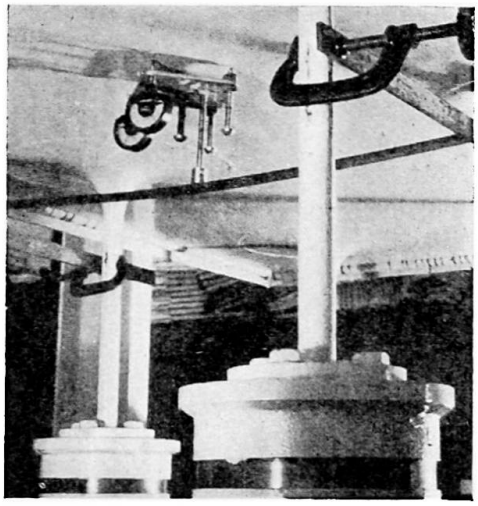

Fig. 4

A dial gauge with a measuring accuracy of 0·001 mm. was used. The value Δx amounted to about 7 cm. The bending moments M are determined from the formula:

$$M_x=K(k_x+\nu k_y)$$

in which K stands for rigidity of the slab and ν for Poisson's ratio. This was done at different points of the flat part of the slab under uniformly distributed loading.

In the centre of the panel in which the greatest positive moment occurs, the measurements were controlled by means of strain-gauges and Huggenberger tensometers (fig. 5).

It is clear that with the use of these curvature-meters it is not possible to determine the bending moments in the neighbourhood of the column capital. For that reason the stress distribution along the boundary of the column capital is measured by means of strain-gauges with a measuring length of 2·5 cm. The negative moments thus determined are controlled by means of Huggenberger tensometers.

Concentrated loads

By several characteristic positions of the concentrated load (in the centre of the panel and in the middle between the columns at the boundary of two panels) the

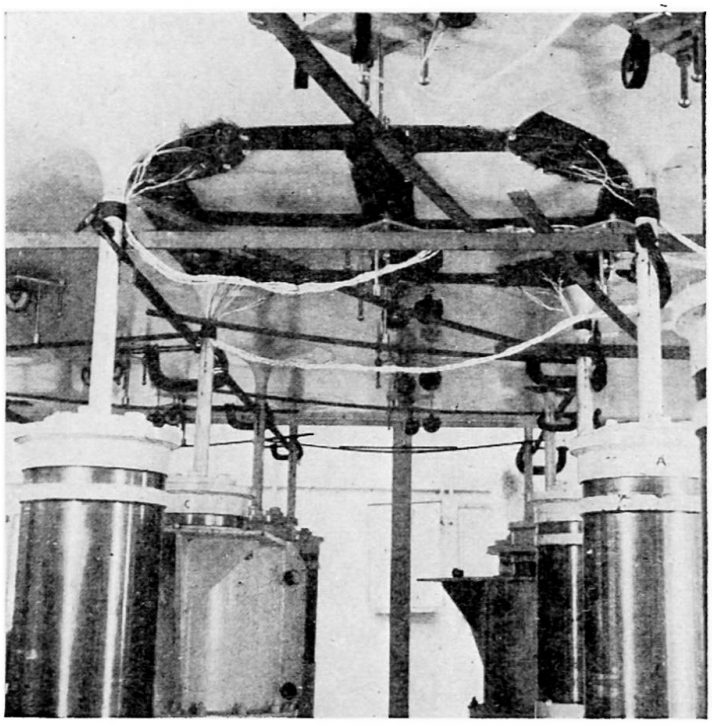

Fig. 5

influence of this load on the bending moments in the flat part of the floor was measured by means of the curvature-meters. The stress below the load was also determined by strain-gauges with a measuring length of 3 mm.

In this way an impression was obtained of the stress distribution in the neighbourhood of the concentrated load.

The bending moments at the boundary of the column capital were established in the same way as with a uniformly distributed load.

The influence of the size of the area over which the concentrated load was distributed was also examined.

Results

It appeared that with a uniformly distributed load the greatest positive moments in all 15 panels differed only slightly from each other. The greatest difference amounted to about 10% of the average.

Owing to the correct choice for the overhanging length, which measured $\frac{3}{8}$ of the distance between two columns each panel thus approximated to the so-called ideal central panel. The other measurements could be limited to the central panel of the test slab.

Fig. 6 shows, among other things, the outstanding results of the deflection measurements by a water-load of 150 cm. height. The greatest deflection amounted to 0·77 mm. in respect to the column capital.

Fig. 6 also depicts the radial and tangential bending moments (M_{rad} and M_{tang}) measured also by a water-load of 150 cm.

The greatest positive moment (point B) amounted to 21 kg.-cm./cm.; for the negative radial bending moment at the boundary of the column capital (0·4a from the column axis, in which a stands for half the panel length) an average of −47 kg.-cm./cm. was found.

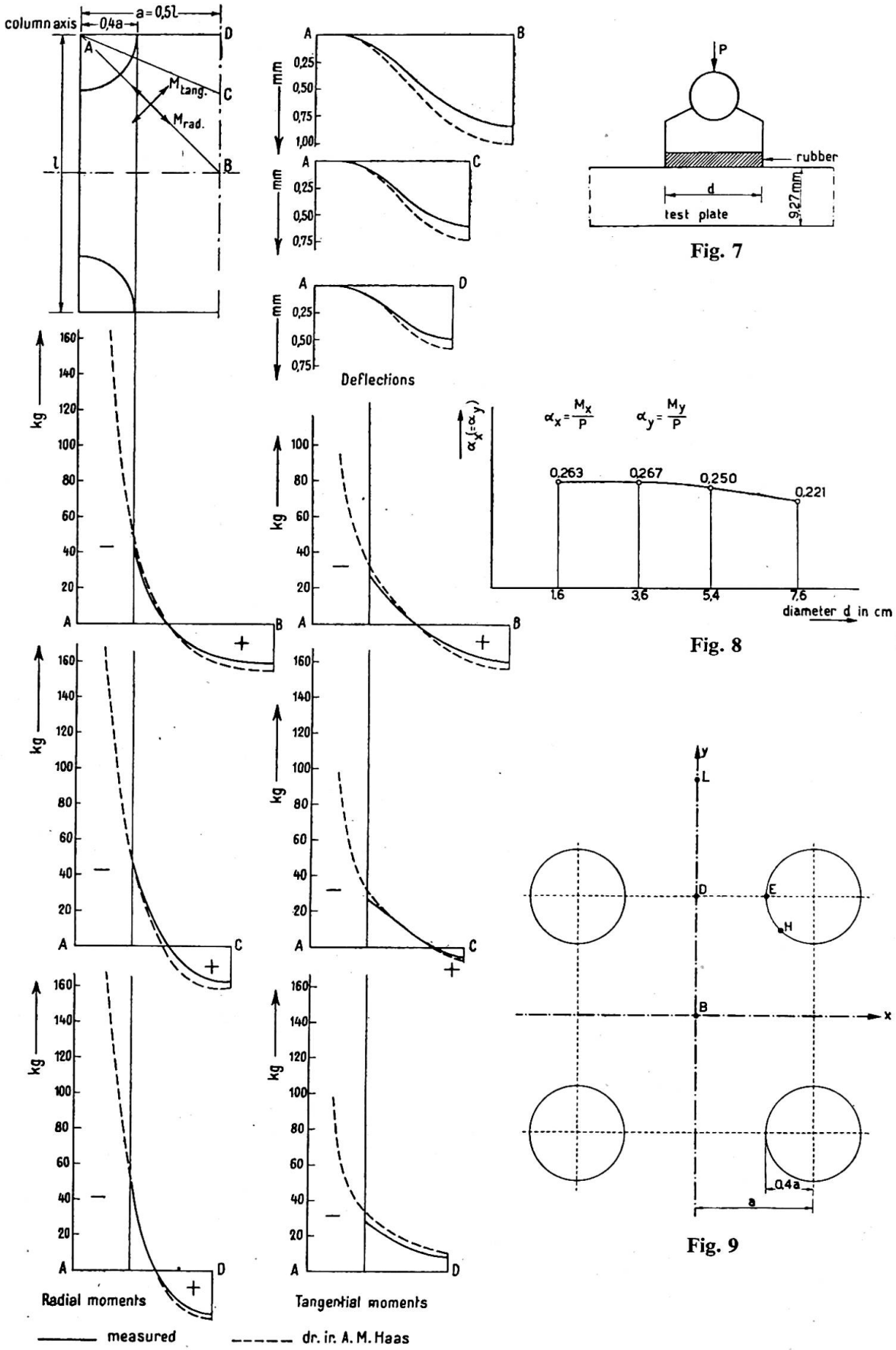

Fig. 6

Fig. 7

Fig. 8

Fig. 9

The bending moments M_x and M_y in point D (fig. 6) amounted to +25 kg.-cm./cm. and −8 kg.-cm./cm. respectively.

During the concentrated loading it appeared that the overhanging length also indicated that the behaviour of all panels approximated to that of the central panel.

The load was concentrated on a circular area with a diameter d (fig. 7). To determine the influence of the size of this diameter on the stresses below the concentrated load, d was chosen as 1·6, 3·6, 5·4 and 7·4 cm. respectively.

Below the concentrated load the curvature-meters indicated about 15% lower values than the strain-gauges with a measuring length of 3 mm.

Fig. 8 shows graphically the influence of the concentration of the load on the stress distribution underneath in the case when the load is situated at point B. It appears that the proportion M/P in which M stands for the bending moment and P for the size of the concentrated force, follows from the formula $\sigma=M/W$ (σ=measured stress, $W=h^2/6$=moment of resistance, h=thickness of the slab), diminished from 0·26 to 0·22, d increasing from 1·6 cm. to 7·6 cm.

TABLE I

Influence of concentrated loads	Concentrated load at B		Concentrated load at D	
	T.N.O.	E.M.P.A.	T.N.O.	E.M.P.A.
α_x at B	+0·263	+0·182	+0·022	—
α_y at B			−0·006	—
α_x at D	+0·026	—	+0·219	+0·099 to +0·192
α_y at D	−0·015	—	+0·177	+0·054 to +0·137
α_x at L	+0·001	—	+0·028	—
α_y at L	−0·008	—	+0·002	—
α_r at H	−0·056	—	−0·017	—
α_r at E	−0·028	—	−0·100	—

$\alpha_x=M_x/P$ $\alpha_y=M_y/P$ $\alpha_r=\alpha_{radial}=M_r/P$.

Table I shows the bending moments at the points B, D, E, H and L, the load being in position B or D.

If the concentrated load is at B (fig. 9) the greatest bending moment at D amounts to about $\frac{1}{10}$ of the bending moments below B. At L some influence can be noticed. The greatest moment at the boundary of the column capital amounts in this case to $\frac{1}{5}$ of the moment at B.

With the concentrated load at D, the bending moments are at B (=L) and E about $\frac{1}{10}$ and about $\frac{5}{10}$ respectively of the moment at D.

A few results of the tests made by Prof. Roš (E.M.P.A.) are given in the table to make comparison possible.

THEORETICAL RESEARCH

The measured results are particularly compared with the results of the calculation method of Dr. Ir. A. M. Haas.[1] In this method, just as in the model, the most usual shapes of column capital and drop panel are replaced by hyperboloids.

Haas approximates the stress distribution in the column supposing the stress distribution to be axially symmetrical in this hyperboloid, by means of the formula for a circular slab in which inertia is inserted varying only with the radius.

[1] For references see end of paper.

TABLE II

The numerical sum of the positive and negative bending moments (pa^3)

		Nichols
Measured	0·47	0·51
Haas	0·51	0·51
A.C.I.	0·52	0·72

The flat part of the floor is shaped as shown in fig. 10. To calculate the part ABG, minus the included part of the column capital, Haas applies, in imitation of Tölke,[2] the solution in polar-co-ordinates of the biharmonic differential equation $\Delta\Delta w=p/K$ according to Clebsch [3] (in which p stands for load per unit area).

$$w=\frac{p}{K}\left[\frac{r^4}{64}+A_0+B_0\ln\frac{r}{0{\cdot}4a}+C_0r^2+D_0r^2\ln\frac{r}{0{\cdot}4a}\right.$$
$$\left.+\sum_{1}^{\infty}(A_nr^{4n}+B_nr^{-4n}+C_nr^{4n+2}+D_nr^{-4n+2})\cos 4n\alpha\right]$$

The above coefficients are determined by co-ordinating along the inside boundary the average of the moments and shearing forces to those in the column capital and to demand along the outer boundary the boundary conditions in a number of connecting points (if more connecting points are chosen, more coefficients have to be added to the calculation).

Fig. 6 shows the deflections and bending moments of the steel model found in this way. The greatest deviation between the theoretically and experimentally determined values for both the deflections and the bending moment appears to be about 15% at maximum, the theory providing higher absolute issues than the test.

As the model test gives only values for the negative moment in the column capital at a distance of $0{\cdot}4a$ from the column axis the negative bending moment at a distance of $0{\cdot}225a$ from the column axis is calculated by means of the theory of Haas, which has appeared to be sufficiently exact. Thus the theoretically determined results for a practical case could be compared to those according to the requirements of the American Concrete Institute and those found by the Eidgenössische Material Prüfungs Anstalt.

Fig. 10 also shows the course of the bending moments found from:

(*a*) the empirical research T.N.O.
(*b*) the theory of Haas,
(*c*) the American requirements (A.C.I. 318–51),[4]
(*d*) the empirical investigation of Prof. Roš (E.M.P.A.).[5]

For the purpose of control, the theoretical total amount of the moments for $c=0{\cdot}45a$ and for $c=0{\cdot}8a$ is also given according to the formula of J. R. Nichols [6]:

$$\Sigma M=pa^3\left[1+\tfrac{1}{3}\frac{c^3}{8a^3}-\frac{4c}{2\pi a}\right]$$

A theoretical investigation which has not yet been completed gave the following results:

(*a*) Tölke, who imagines the slab to be immovably fastened at a distance $r=0{\cdot}2a$,

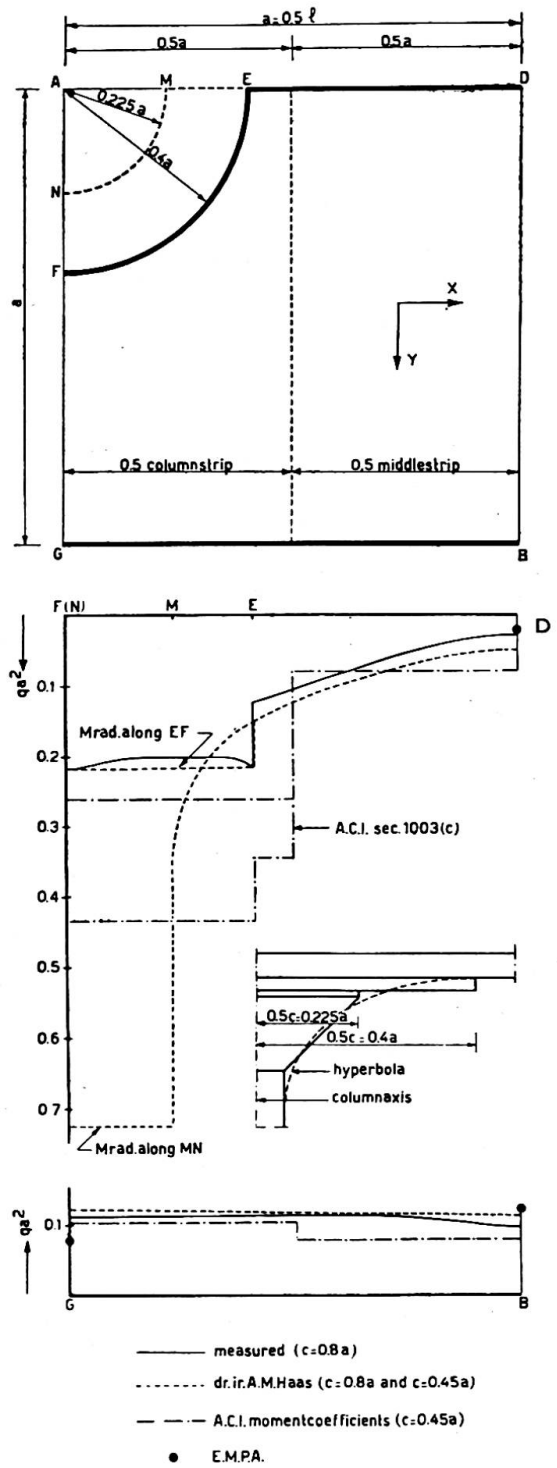

Fig. 10

as well as Haas, does not take into account the coefficients $B_1 \ldots B_n$ and $D_1 \ldots D_n$. Now this appears not only to be allowable but even desirable.

(*b*) When the number of connection points along the outer boundary increases, all stress quantities in the slab approach a limit, provided the calculation was done very accurately. When three connection points and the coefficients A_0 up to and including A_2, C_0 up to and including C_2, B_0 and D_0 are used the deviation from the limit amounts to 2% in the centre of the panel.

Conclusions

As a result of the above investigations the following conclusions concerning flat slab floors having square panels may be drawn.

1. The calculation method of Haas provides that by a uniformly distributed load, bending moments in the ideal central panel are maximal about 15% higher than those found during the investigation of the model. A satisfactory explanation of this discrepancy has not yet been found. Partly it might have been caused by the circumstance that in the steel model the ideal central panel has been approximated but not fully realised. In any case the conclusion may be drawn that the above theory gives results that are sufficiently correct for practical use.

2. The measured results achieved by Prof. Roš with a uniformly distributed load agree sufficiently with the results of T.N.O. so that these T.N.O. results can be applied in practice directly to reinforced concrete, though found on a steel model.

3. Except at the boundary of the column capital the results found with the A.C.I. requirements agree fairly well with those found by T.N.O. The negative bending moments at the column capital, as found according to the theory of Haas, are considerably greater than those of the A.C.I. The A.C.I. condition that, for determination of the compressive stress in the concrete at the boundary of the column capital, the width of the column strip must be decreased to $\frac{3}{4}$ of its value does point in this direction.

4. From T.N.O. experiments as well as from those of Prof. Roš it follows that, for the bending moment below a not too strongly concentrated load, a value of $\frac{1}{4}$ or $\frac{1}{5}P$ may be taken into account. If this concentrated load is placed in the centre of the panel, the value of the negative moment at a distance $0{\cdot}4a$ from the column axis amounts to $\frac{1}{20}P$ and the negative as well as the positive moment right between the columns amounts to about $\frac{1}{40}P$. In the surrounding panels the influence of the concentrated load can be neglected. When the load is placed right between the columns on the boundary of two panels, then the moment below the load, near the column capital and in the centre of the adjacent panel, amounts to $\frac{1}{5}P$, $\frac{1}{10}P$ and $\frac{1}{40}P$ respectively.

5. When a flat slab floor with an overhanging length of $\frac{3}{8}$ of the span length of support is used, all panels will behave as ideal central panels, with a uniformly distributed load as well as with a concentrated load. In this way it is possible to diminish the quantity of reinforcement in the concrete and to simplify the calculations and the construction.

Acknowledgements

The author would like to emphasise that several persons contributed to this research.

In the first place the author wishes to thank Prof. Ir. C. G. J. Vreedenburgh, Professor at the Technical University of Delft, who suggested and directed this research.

The design of the model was made in close co-operation with Dr. Ir. A. M. Haas, who also gave his collaboration during the tests.

Furthermore the following persons gave their assistance: Ir. J. G. Baas, former T.N.O. engineer; Jac. de Jong, technical assistant of T. N. O.; O. Stokman, assistant employed by the "Delfts Hogeschool Fonds"; and several students of the Technical University of Delft and the staff of the Department of Public Works, Board of Bridges.

REFERENCES

(1) HAAS, A. M. *Ontwerp en berekening van paddestoelvloeren*, Nijhoff, Den Haag, 1949.
(2) TÖLKE, F. " Ueber Spannungszustände in dünnen Rechtecksplatten," *Ingenieur-Archiv* **5**, 1934.
(3) CLEBSCH, A. *Theorie der Elastizität fester Körper*. Teubner, Leipsig, 1862.
(4) Building Code Requirements for Reinforced Concrete, American Concrete Institute (318–51), 1951.
(5) ROŠ., M., and EICHINGER, A. Résultats de mesures de déformations et de tensions sur dalles à champignons, E.M.P.A.
(6) NICHOLS, J. R. "Statical Limitations upon the Steel Requirement in Reinforced Concrete Flat Slab Floors," *Trans. Amer. Soc. Civ. Engrs.*, **77**, 1670, 1914.

Summary

By means of a steel model the Committee for Research on Constructions T.N.O. investigated the conduct of an ideal square central panel of a flat slab floor with uniformly distributed and concentrated loads.

The theoretical investigation was based on the theory of Dr. Ir. A. M. Haas, who took into account the influence of the column capital on the stress distribution in the floor.

The results of the T.N.O. investigation were compared with the latest American Building Code Requirements for Reinforced Concrete (A.C.I. 318–51) and with tests made by Prof. Dr. Ing. h.c. M. Roš.

Résumé

A l'aide d'un modèle en acier le Comité de Recherches sur les Constructions T.N.O. a examiné le comportement d'une zone centrale carrée et idéale d'une dalle-champignon soumise à une charge uniformément répartie, puis à une charge concentrée.

La recherche théorique était basée sur la théorie du Dr. Ing. A. M. Haas, qui, dans ses calculs, a tenu compte de l'influence du chapiteau des colonnes sur la répartition de la tension.

Les résultats des recherches de la T.N.O. sont comparés avec les nouvelles prescriptions sur le béton armé de l'Institut Américain du Béton (A.C.I 318–51) et avec les recherches effectuées par M. le Prof. Dr. Ing. h.c. M. Roš.

Zusammenfassung

Der Ausschuss für Eisenbeton- und Stahlbauten T.N.O. hat an einem Stahlmodell das Verhalten eines quadratischen ideellen Mittelfeldes einer Pilzdecke unter gleichmässiger Belastung und unter Einzellast untersucht.

Die theoretische Forschung baut auf der Theorie von Herrn Dr. Ing. A. M. Haas auf, der in seinen Berechnungen den Einfluss der Pilzköpfe auf die Spannungsverteilung berücksichtigt hat.

Die Ergebnisse der T. N. O.-Forschungen wurden mit den neuesten Forderungen der Amerikanischen Betonanstalt (A.C.I. 318–51) sowie mit den Untersuchungen von Herrn Prof. Dr. Ing. h.c. M. Roš verglichen.

Leere Seite
Blank page
Page vide