Zeitschrift: IABSE congress report = Rapport du congrès AIPC = IVBH Kongressbericht

Band: 3 (1948)

Rubrik: Id: Bending and torsion of solid web girders

Nutzungsbedingungen

Die ETH-Bibliothek ist die Anbieterin der digitalisierten Zeitschriften auf E-Periodica. Sie besitzt keine Urheberrechte an den Zeitschriften und ist nicht verantwortlich für deren Inhalte. Die Rechte liegen in der Regel bei den Herausgebern beziehungsweise den externen Rechteinhabern. Das Veröffentlichen von Bildern in Print- und Online-Publikationen sowie auf Social Media-Kanälen oder Webseiten ist nur mit vorheriger Genehmigung der Rechteinhaber erlaubt. Mehr erfahren

Conditions d'utilisation

L'ETH Library est le fournisseur des revues numérisées. Elle ne détient aucun droit d'auteur sur les revues et n'est pas responsable de leur contenu. En règle générale, les droits sont détenus par les éditeurs ou les détenteurs de droits externes. La reproduction d'images dans des publications imprimées ou en ligne ainsi que sur des canaux de médias sociaux ou des sites web n'est autorisée qu'avec l'accord préalable des détenteurs des droits. En savoir plus

Terms of use

The ETH Library is the provider of the digitised journals. It does not own any copyrights to the journals and is not responsible for their content. The rights usually lie with the publishers or the external rights holders. Publishing images in print and online publications, as well as on social media channels or websites, is only permitted with the prior consent of the rights holders. Find out more

Download PDF: 03.02.2026

ETH-Bibliothek Zürich, E-Periodica, https://www.e-periodica.ch

Id1

Stabilité latérale des poutres à âme pleine
(Méthode par superposition)

Kipperscheinungen von I-Trägern
(Eine Superpositionsmethode)

Lateral stability of I-beams
(Method of super-position)

ERIC INGERSLEV
London

The problem I am going to tackle is not a new one in technical literature, as it dates back to 1899, when it was first treated simultaneously by A. G. Michell and Ludwig Prandtl.

Further development rests mainly upon works of S. Timoshenko, presenting the special features of the rolled steel joist, and of H. Wagner, who described the phenomenon, which he called "Drillknickung", i.e., buckling by twist.

The problem is to-day fully solved mathematically, but the exact solution is normally so involved that it has no practical bearing — which brings us to the point of this discussion, the approximate methods.

Our joist with I Section has the following leading features :

Maximum flexural rigidity	$A = EI_1$
Minimum flexural rigidity	$B = EI_2$
Torsional rigidity	$C = GI_t$
Flexural rigidity of one flange	$D \sim \frac{1}{2} B$.

Its deflections will be measured from a system of co-ordinate axes x, y, u ; x along the centre line of the undeflected beam; y at right angles to x in the web; and u at right angles to both x and y. The deflected beam will at the point (x, y, u) be twisted an angle β.

If vertical moments (i.e., acting in the plane of the web) M and horizontal moments M_h are applied to the centre line of the beam and if

they are just sufficient to make the beam buckle, then the leading equations will be:

$$-A\frac{d^2y}{dx^2} = M + \frac{A-B}{B}\beta M_h\,, \tag{1}$$

$$-B\frac{d^2u}{dx^2} = M_h + \frac{A-B}{A}\beta M\,, \tag{2}$$

$$MM_h + (A-B)\left(\frac{M^2}{A} - \frac{M_h^2}{B}\right) + \frac{AB}{A-B}\frac{d}{dx}\left[C\frac{d\beta}{dx} - \frac{d}{dx}\left(\frac{1}{2}Dh^2\frac{d^2\beta}{dx^2}\right)\right]. \tag{3}$$

If the maximum value of M be M_1, we will write our solution as:

$$M_1 = \frac{k}{l}\frac{A}{A-B}\sqrt{BC}$$

k is a constant characteristic of the case of loading, and l is the span.

We will here confine ourselves to an I-cross-section, symmetrical about both its axis constant along its length, and free to rotate around a vertical axis over the supports. Our first case shall consist of vertical moments only.

$$\text{Introducing } m = \frac{M}{M_1} \text{ and } \alpha^2 = \frac{\frac{1}{2}Dh^2}{Cl^2} \text{ and } l\frac{d\beta}{dx} = \beta'\,.$$

Equation (3) becomes:

$$\beta m^2 k^2 + \beta'' - \alpha^2\beta'''' = 0\,. \tag{4}$$

An exact solution is arrived at by a "trial and error" method: guessing β in $\beta m^2 k^2$ and integrating this expression.

A satisfactory approximation, however, is found by inserting the average β, $\beta_{av} \sim 0.8\,\beta_{max}$ and solving the following two equations:

$$0.8\,\beta_{max}\,m^2 k_{M_1}^2 = -\beta''$$

$$0.8\beta_{max}\frac{m^2 k_{M_2}^2}{\alpha^2} = \beta''''$$

and then using

$$k = \sqrt{k_{M_1}^2 + k_{M_2}^2}$$

$\frac{1}{k_{M_1}^2}$ is found as the maximum bending moment in a simple supported beam with the distributed load 0.8 m^2 and $\frac{\alpha^2}{k_{M_2}^2}$ will be the maximum deflection of the same beam (EI = 1, length = 1).

If the distributed load p and the single forces P of our rolled steel joist do not act at the centre line of the beam but at a distance a above the centre line, then we should load our simply supported beam once more — this time with $\frac{\beta}{\beta_{max}}\cdot(pl^2 + Pl)\frac{a}{C}$. The maximum moment should be 1 (producing k_{P1}) and the maximum deflection should be α^2 (producing k_{P2}).

The final factor k, including for all the effects we have now dealt with, is found as the solution to the equation :

$$\frac{1}{\left(\frac{k}{k_{M_1}}\right)^2 + \frac{k}{k_{P_1}}} + \frac{1}{\left(\frac{k}{k_{M_2}}\right)^2 + \frac{k}{k_{P_2}}} = 1 .$$

We have not yet taken any longitudinal forces in the beam into account. If we disregard them, I have just shewn how to find k, and this value we will call k_M. If, on the other hand, we only let the longitudinal force N (which we will write as $N = \frac{\varkappa B}{l^2}$) act, we will then get from the normal Euler formula $\varkappa_E = \pi^2$.

If we finally include for both longitudinal force and bending moments, our result will be found from the following equation :

$$\frac{\varkappa}{\varkappa_E} + \left(\frac{k}{k_M}\right)^2 = 1 .$$

Time does not permit the full proof of the various formulae I have given. It must be sufficient to mention that they are based upon the shape of the deflection being the same type for all the parts into which we split the load and the beam. If the types differ, the result will be too small values of $\varkappa$ and k, which only means that we are on the safe side. It is possible, however, in some of these special cases to give special formulae taking this into account.

Finally I will show you an example of how to use our formulae.

I choose a rolled steel joist subject to a longitudinal force $N = \frac{\varkappa B}{l^2}$ and a single force P acting at the centre of the beam on top of the upper flange.

m is then simply a triangle :

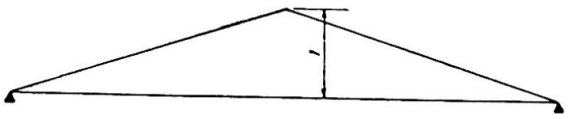

0.8 m^2 will consist of two 2nd degree parabolas :

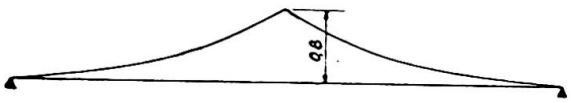

This is used as load on a simply supported beam.

$$\text{Maximum moment} = \frac{1}{k_{M_1}^2} = \frac{1}{20} ; \quad k_{M_1} = 4.5 .$$

$$\text{Maximum deflection} = \frac{\alpha^2}{k_{M_2}^2} = \frac{7}{1440} ; \quad k_{M_2} = 14.3\,\alpha .$$

This beam should next be loaded with —

$$\frac{\beta}{\beta_{max}}(pl^2 + Pl)\frac{a}{C} = Pl\frac{a}{C} = 4M_1\frac{h}{2C} = 2\frac{k}{l}\frac{A}{A-B}\sqrt{BC}\frac{h}{C} = 4k\frac{A}{A-B}\alpha$$

i.e., a single force $\frac{4kA\alpha}{A-B}$ acting at the centre.

$$\text{Maximum moment} = 1 = \frac{1}{4} \times \frac{4\,kA\alpha}{A - B}\,; \qquad k_{P_1} = \frac{A - B}{A\alpha}\,.$$

$$\text{Maximum deflection} = \alpha^2 = \frac{1}{12} \times \frac{kA\alpha}{A - B}\,; \qquad k_{P_2} = \frac{12\,(A - B)\,\alpha}{A}\,.$$

The result of P only is then —

$$\frac{1}{\left(\frac{k_M}{4.5}\right)^2 + \frac{k_M}{\frac{A - B}{A\alpha}}} + \frac{1}{\left(\frac{k_M}{14.3\,\alpha}\right)^2 + \frac{k_M}{\frac{12\,(A - B)\,\alpha}{A}}} = 1$$

and P *and* N together gives

$$\frac{\varkappa}{\pi^2} + \left(\frac{k}{k_M}\right)^2 = 1\,.$$

Assuming $\frac{A - B}{A} \sim 1$, $\alpha \sim \frac{1}{2}$ (as a special case) one gets

$$\frac{1}{\left(\frac{k_M}{4.5}\right)^2 + \frac{k_M}{2}} + \frac{1}{\left(\frac{k_M}{7.15}\right)^2 + \frac{k_M}{6}} = 1 \qquad k_M = 5.1$$

$$\frac{\varkappa}{\pi^2} + \left(\frac{k}{5.1}\right)^2 = 1$$

$\varkappa =$	$-\pi^2$	-5	0	$+5$	$+\pi^2$
$k =$	7.2	6.3	5.1	3.6	0

Literature

A. G. M. Michell, *Phil. Mag.*, 1899, vol. XLVIII.
Ludwig Prandtl, *Kipperscheinungen*, Nürnb., 1899 and Diss. München, 1901.
K. G. Meldahl, *Schiffbautech. Ges. Berl.*, Nov., 1902. — *Ingeniören*, Copenhagen, 1903, p. 331.
T. Prescott, *Phil. Mag.*, 6th Ser., vol. XXXVI, 1918, p. 297.
H. Reiszner, *Sitz. Ber. d. Berl. Math. Ges.*, III, 1904, p. 53.
M. K. Grober, *Physik. Zeitschr.*, XV, 1914, pp. 460, 889.
E. Chwalla, *Forsch. h. aus d. Geb. d. Stahlb.*, Berlin, 1939, and *Stahlbau*, Bd. 8, p. 46, 1935.
S. Timoshenko, *Bull. Polyt. Inst.*, Petersburg, 1905, *Ztschr. f. Math. u. Ph.*, Bd. LVIII, 1910, *Sur la stab. des syst. élast.*, 1910 (*Ann. Ponts et Chaussées*, IV, 1. P., p. 73, Paris, 1913, and *Theory Elast. Stab.*, Lond. and N. Y., 1936, pp. 249, 264, 267.
H. Wagner, *Verdreh. Knick. off. Prof.* (*Festschr. 25 Jah. T. H. Danz*, 1929).
H. Wagner u. Pretschner, *Luftf. Forschg.*, Bd. 11, p. 174, Berlin, 1937.
R. Kappus, *Luftf. Forschg.*, Bd. 14, p. 444, Berlin, 1937.
E. E. Lundquist, *Journ. Aeron. Sci.*, vol. 4, No. 6, April, 1947, U. S. A., p. 249.
H. Nylander, *Die Einw. Aussteif a. Dreh. vorg.*, etc., Diss. Sthlm., 1942.
H. Hencky, *Eisenbau*, 11, 1920, p. 437.
F. Stüssi, *Mém. de l'A. I. P. C.*, vol. 3, p. 401, Zurich, 1935.
F. Hartmann, *Knick, Kipp. Beul.*, Leipzig and Wien, 1937.
A. Engelund, *Staalkstr.*, I, p. 233, Copenhagen, 1943.
K. Federhofer, *Sitzungsber. Akad. Wiss. Wien*, Abt. IIa, Bl. 140, H. 5 u. 6, p. 237, Wien, 1931.

Résumé

L'auteur de ce mémoire établit les équations fondamentales de la stabilité au renversement latéral. Il établit des solutions approchées pour différents cas simples, par exemple : charges verticales ou charges normales; l'effet de la poutre elle-même (considérée comme une poutre rectangulaire de faible épaisseur) ou l'effet des semelles; et même l'influence des charges appliquées au-dessus de la ligne des centres. Finalement, l'auteur indique des formules applicables au cas où plusieurs influences agissent simultanément.

Zusammenfassung

Es werden die Hauptgleichungen des Kipproblems dargestellt. Eine Näherungslösung wird gefunden, indem eine Reihe von Spezialfällen untersucht wird, wie z.B.: lotrechte Belastung oder Normalkräfte; die Wirkung des Balkens an sich selber (idealisiert als schmaler Rechteckquerschnitt), contra die Wirkung der Flansche und ferner der Einfluss von Kräften, die oberhalb der Verbindungslinie der Schwerpunkte des Trägers angreifen. Schliesslich werden Formeln angegeben für den Fall, dass mehrere oder alle der Einzelfälle gleichzeitig wirken.

Summary

The leading differential equations governing the lateral stability of beams are put forward. An approximate solution is found by dividing the process into a series of " plain cases " such as vertical loading or longitudinal force; further the effect of the beam itself (corresponding to that of a narrow rectangular beam) against the special effect of the flanges; also the effect produced by the loading acting above the centreline of the web. Finally, formulae are produced giving the joint effect of several or all " plain cases " acting simultaneously.

Leere Seite
Blank page
Page vide

Id2

Considérations sur la flexion de poutres droites à section variable sous l'influence de charges extérieures

Betrachtungen über die Biegung von geraden Balken mit veränderlichem Querschnitt unter äusseren Lasten

Considerations on bending straight beams of variable cross section under action of external loads

J. NALESZKIEWICZ
M. E., Sc. D., Gdansk-Wrzeszcz

1. The method

The method which we will use in this case has been proposed by S. Timoshenko ([1]). It consists in the expansion of the function representing the deflection curve of a simply supported beam (fig. 1) into a trigonometric series. To all reputed advantages of this method we intend to add a new one, obtained when not only the deflection curve, but also when all functions representing the external loading and variable stiffness in bending of the beam are resolved into similar series.

We will endeavour to resolve the problem of the general case of a simply supported beam of variable cross section supported and loaded in the plane of a principal axe of its cross section by all possible forms of external loading, i.e. by concentrated forces and couples, as well as distributed loads which might have normal as well as axial components, so that the resulting compressive axial force might vary from section to section either continuously or discontinuously.

([1]) S. Timoshenko, *Application of generalized coordinates to solution of problems on bending of bars and plates* (*Bull. Polyt. Inst.*, Kiev, 1909) (Russian).
S. Timoshenko, *Bull. Soc. Eng. Techn.*, St. Petersburg, 1913.
S. Timoshenko, *Theory of Elastic Stability*, New York and London, 1936 (see page 23); *Strength of Materials*, Vol. 1, 1930 (see page 306).

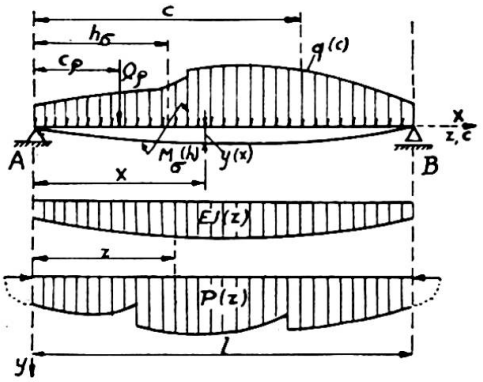

Fig. 1.

Let the variable stiffness in bending $E \cdot J = F(x)$ of our beam be represented by either of two types of convergent Fourier series :

$$E \cdot J = F(x) = A_0 + \sum_{n=1}^{\infty} A_n \cdot \cos n \frac{2\pi x}{l} + \sum_{n=1}^{\infty} B_n \cdot \sin n \frac{2\pi x}{l}, \tag{1}$$

or:

$$E \cdot J = A_0 + \sum_{n=1}^{\infty} A_{\frac{n}{2}} \cdot \cos\left(\frac{n}{2} \cdot \frac{2\pi x}{l}\right) \equiv \sum_{n=0}^{\infty} A_{\frac{n}{2}} \cdot \cos \frac{n \cdot \pi \cdot x}{l}. \tag{1'}$$

We suppose further, that the external load consists of:

1. Lateral components of concentrated loads Q_ρ, where $\rho = 1, 2, \ldots, \varkappa$, acting at distances c_ρ from left support A of the beam;

2. Distributed lateral loads $q = q(c)$, which are functions of the distance c from the left support A;

3. Lateral couples, whose moments M_σ, $(\sigma = 1, 2, \ldots, \tau)$ acting in the plane of fig. 1, are applied to the beam sections at distances from A equal to h_σ;

4. Compressive (when positive) axial forces $P = P(x)$, which may continuously or discontinuously vary from section to section, because of axial components of external concentrated or distributed loads.

We will further consider the expansion of the functions $q(c)$ and $P(x)$ in following necessarily convergent trigonometrical series:

$$q = q(c) = \sum_{n=1}^{\infty} \beta_{\frac{n}{2}} \cdot \sin\left(\frac{n}{2} \cdot \frac{2\pi c}{l}\right) \equiv \sum_{n=1}^{\infty} \beta_{\frac{n}{2}} \cdot \sin \frac{n\pi c}{l}; \tag{2}$$

$$P = P(z) = \sum_{n=0}^{\infty} p_n \cdot \cos n \frac{2\pi z}{l} + \sum_{n=1}^{\infty} \cdot \nu_n \cdot \sin n \frac{2\pi z}{l}; \tag{3}$$

or:

$$P = \sum_{n=0}^{\infty} p_{\frac{n}{2}} \cdot \cos\left(\frac{n}{2} \cdot \frac{2\pi z}{l}\right) \equiv \sum_{n=0}^{\infty} p_{\frac{n}{2}} \cdot \cos \frac{n\pi z}{l}. \tag{3'}$$

Finally, we will accept the possibility of developing the ordinates of the deflection curve into a similar " half-wave " series:

$$y = \sum_{n=1}^{\infty} b_{\frac{n}{2}} \cdot \sin\left(\frac{n}{2} \cdot \frac{2\pi x}{l}\right) \equiv \sum_{n=1}^{\infty} b_{\frac{n}{2}} \cdot \sin \frac{n \cdot \pi \cdot x}{l}, \tag{4}$$

which is always possible, as Dirichlet's conditions for expanding into a Fourier series are always fulfilled for a deflexion curve of a continuous beam.

The series (4) satisfies all the end conditions of a beam, freely supported at its ends.

We have introduced here four different terms x, z, c, h for the same abscissae, for the sake of facilitating some later integrations.

By differentiating once and twice the series (4) we obtain expressions for the approximate values of the slope ϑ and curvature $\frac{1}{\rho}$ of the deflexion curve:

$$\vartheta \cong y' = \frac{\pi}{l} \cdot \sum_{n=1}^{\infty} n \cdot b_{\frac{n}{2}} \cdot \cos \frac{n \cdot \pi \cdot x}{l}; \tag{4'}$$

$$\frac{1}{\rho} \cong y'' = -\frac{\pi^2}{l^2} \cdot \sum_{n=1}^{\infty} \cdot n^2 \cdot b_{\frac{n}{2}} \cdot \sin \frac{n \cdot \pi \cdot x}{l}. \tag{4''}$$

2. Bending of the beam

We propose now to derive the equations of the deflexion curve of our beam, subject to the external loads: Q_z, M_σ, $q(c)$, $P(z)$, by using the general principle of the *strain energy* in bending. To obtain the expressions for the Fourier series coefficients $b_{\frac{n}{2}}$ $(n = 1, 2, \ldots, \infty)$, we must derive the expressions for the change of strain energy δV, when the coefficients $b_{\frac{n}{2}}$ are variated independently of each other by small increases $\delta b_{\frac{n}{2}}$. We will further equate this change to the work δT of external forces during this additional deflexion.

1. *The strain energy* of a beam [2] may be given in this case by the equation:

$$V = \frac{1}{2} \int_0^l E \cdot J \cdot \left(\frac{d^2 y}{dx^2}\right)^2 \cdot dx \tag{5}$$

Suppose at first, that the stiffness in bending $E \cdot J$ of our beam is constant on an extent from $x = 0$ to $x = z$, then for this part of the beam the partial strain energy V' will be:

---

[2] M. T. Huber, *On critical loads of axially compressed bars of discontinuously variable cross sections* (*Publications of the Tech. Inst. for Aeronautics*, Warsaw, 1930) (Polish).

$$V' = \frac{1}{2} E \cdot J \int_0^z \left(\frac{d^2 y}{dx^2}\right)^2 \cdot dx \tag{6}$$

$$= \frac{\pi^4 \cdot E \cdot J}{2\, l^4} \cdot \int_0^z dx \left[\sum_{n=1}^{\infty} n^4 \cdot b^2_{\frac{n}{2}} \cdot \sin^2 n \frac{\pi x}{l} + 2 \sum_{\substack{n,k=1 \\ (n \neq k)}}^{\infty} n^2 \cdot k^2 \cdot b_{\frac{n}{2}} \cdot b_{\frac{k}{2}} \cdot \sin \frac{n \pi x}{l} \cdot \sin \frac{k \pi x}{l} \right]$$

$$= \frac{\pi^3 \cdot EJ}{2 \cdot l^3} \cdot \sum_{n=1}^{\infty} n^3 \cdot b^2_{\frac{n}{2}} \cdot \int_0^z \sin^2 \frac{n \cdot \pi \cdot x}{l} \cdot d\left(\frac{n \pi x}{l}\right) + \frac{\pi^3 \cdot E \cdot J}{l^3} \cdot \sum_{\substack{n,k=1 \\ n \neq k}}^{\infty} n^2 \cdot k^2 \cdot b_{\frac{n}{2}} \cdot b_{\frac{k}{2}} \int_0^z \sin \frac{n \pi x}{l} \cdot \sin \frac{k \pi x}{l} \cdot d\left(\frac{\pi x}{l}\right)$$

$$= \frac{\pi^3 \cdot E \cdot J}{2\, l^3} \cdot \left\{ \sum_{n=1}^{\infty} n^3 \cdot b^2_{\frac{n}{2}} \left[n \frac{\pi \cdot z}{2\, l} - \frac{1}{4} \cdot \sin n \frac{2\, \pi z}{l} \right] + \sum_{\substack{n,k=1 \\ (n \neq k)}}^{\infty} n^2 \cdot k^2 \cdot b_{\frac{n}{2}} \cdot b_{\frac{k}{2}} \cdot \left[\frac{1}{k-n} \cdot \sin (k-n) \frac{\pi z}{l} - \frac{1}{k+n} \cdot \sin (k+n) \frac{\pi \cdot z}{l} \right] \right\}$$

$$= \frac{\pi^3 \cdot E \cdot J}{2\, l^3} \cdot \left\{ \frac{\pi z}{2\, l} \cdot \sum_{n=1}^{\infty} n^4 \cdot b^2_{\frac{n}{2}} - \frac{1}{4} \sum_{n=1}^{\infty} n^3 \cdot b^2_{\frac{n}{2}} \cdot \sin \left(n \frac{2\, \pi \cdot z}{l} \right) + \sum_{\substack{n,k=1 \\ (n \neq k)}}^{\infty} n^2 \cdot k^2 \cdot b_{\frac{n}{2}} \cdot b_{\frac{k}{2}} \cdot \left[\frac{1}{k-n} \cdot \sin (k-n) \frac{\pi \cdot z}{l} - \frac{1}{k+n} \cdot \sin (k+n) \frac{\pi z}{l} \right] \right\}.$$

Having thus obtained the strain energy V' for $0 \leqslant x \leqslant z$, under the condition that there was $E \cdot J = \text{const}$, we may now suppose that $E \cdot J$ remains constant only in the interval of $z < x < z + dz$, and afterwards integrate the obtained differential for the full length of the beam. We obtain in this manner the full strain energy V of the beam with variable stiffness:

$$V = \frac{\pi^3}{2\, l^3} \left[\frac{\pi}{2\, l} \cdot \sum_{n=1}^{\infty} n^4 \cdot b^2_{\frac{n}{2}} \cdot \int_0^l EJ \cdot dz - \frac{1}{4} \sum_{n=1}^{\infty} n^3 \cdot b^2_{\frac{n}{2}} \int_0^l E \cdot J \cdot d\left(\sin n \frac{2\, \pi z}{l}\right) + \sum_{\substack{n,k=1 \\ (n \neq k)}}^{\infty} n^2 \cdot k^2 \cdot b_{\frac{n}{2}} \cdot b_{\frac{k}{2}} \left\{ \frac{1}{k-n} \int_0^l EJ \cdot d \left[\sin (k-n) \frac{\pi z}{l} \right] - \frac{1}{k+n} \cdot \int_0^l EJ \cdot d \left[\sin (k+n) \frac{\pi z}{l} \right] \right\}$$

$$= \frac{\pi^4}{4\,l^4} \cdot \left\{ \sum_{n=1}^{\infty} n^4 \cdot b^2_{\frac{n}{2}} \int_0^l \mathrm{EJ} \cdot dz - \sum_{n=1}^{\infty} n^4 \cdot b^2_{\frac{n}{2}} \int_0^l \mathrm{EJ} \cdot \cos n \frac{2\,\pi z}{l} \cdot dz \right.$$

$$+ 2 \sum_{\substack{n,k=1 \\ (n \neq k)}}^{\infty} n^2 \cdot k^2 \cdot b_{\frac{n}{2}} \cdot b_{\frac{k}{2}} \left[\int_0^l \mathrm{EJ} \cdot \cos (k - n) \frac{\pi z}{l} \cdot dz \right.$$

$$\left. \left. - \int_0^l \mathrm{EJ} \cdot \cos (k + n) \frac{\pi z}{l} \cdot dz \right] \right\}$$

$$= \frac{\pi^4}{4\,l^3} \cdot \left[\mathrm{A}_0 \sum_{n=1}^{\infty} n^4 b^2_{\frac{n}{2}} - \frac{1}{2} \sum_{n=1}^{\infty} \mathrm{A}_n \cdot n^4 \cdot b^2_{\frac{n}{2}} \right.$$

$$\left. + \sum_{\substack{n,k=1 \\ (n \neq k)}}^{\infty} n^2 \cdot k^2 \cdot b_{\frac{n}{2}} \cdot b_{\frac{k}{2}} \left(\mathrm{A}_{\frac{k-n}{2}} - \mathrm{A}_{\frac{k+n}{2}} \right) \right] \quad (7)$$

Here A_i are the coefficients of the series (1), whereas the "half-wave" coefficients $\mathrm{A}_{\frac{n \pm k}{2}}$, when $(n \pm k)$ are uneven numbers, belong to series (1′):

$$\mathrm{A}_0 = \frac{1}{l} \int_0^l \mathrm{E} \cdot \mathrm{J} \cdot dz \,,$$

$$\mathrm{A}_n = \frac{2}{l} \int_0^l \mathrm{E} \cdot \mathrm{J} \cdot \cos n \frac{2\,\pi z}{l} \cdot dz \,,$$

$$\mathrm{A}_{\frac{n \pm k}{2}} = \frac{2}{l} \int_0^l \mathrm{E} \cdot \mathrm{J} \cdot \cos \left[\frac{n \pm k}{2} \cdot \frac{2\,\pi z}{l} \right] \cdot dz \,. \quad (8)$$

What concerns the integral (8), in the case when $(n \pm k)$ is an uneven number, we way interprete the development (1′) as an expansion of a symmetrical or antisymmetrical curve, consisting of two curves $f(x)$ symmetrically or antisymmetrically disposed to each other into a normal Fourier series (1) as shown in fig. 2.

We will calculate now the variation $\delta \mathrm{V}$ of the strain energy, when the deflexion is variated, while every coefficient b obtains a small increase $\delta b_{\frac{n}{2}}$. From the form of the series it may be deduced at once, that variations $\delta b_{\frac{n}{2}}$ may be considered as wholely independent from each other. Hence

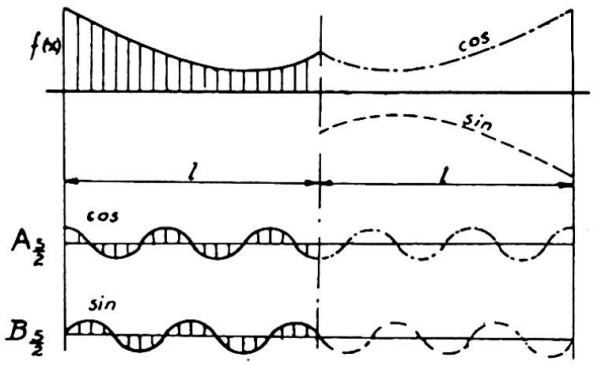

Fig. 2.

we may regard δV as consisting of a whole series of independent "partial" variations δV_n, obtained from each variation $\delta b_{\frac{n}{2}}$ separately. In fact, as $\delta b_{\frac{n}{2}}$ are independent from each other, we may take only one $\delta b_{\frac{n}{2}} \neq 0$, and all other $\delta b_{\frac{k}{2}} = 0$ (for $n \neq k$). From the type of equation (7) it is evident, that

$$\delta V = \sum_{n=1}^{\infty} \delta V_n.$$

Such a "partial" variation of V will be:

$$\delta V_n = \frac{\partial V}{\partial b_{\frac{n}{2}}} \cdot \delta b_{\frac{n}{2}}$$

$$= \delta b_{\frac{n}{2}} \cdot \frac{\pi^4}{2\,l^3} \cdot \left\{ \left(A_0 - \frac{1}{2} A_n \right) \cdot n^4 \cdot b_{\frac{n}{2}} + \frac{1}{2} n^2 \cdot \sum_{\substack{k=1 \\ (k \neq n)}}^{\infty} k^2 \cdot b_{\frac{k}{2}} \cdot \left(A_{\frac{k-n}{2}} - A_{\frac{k+n}{2}} \right) \right\}. \tag{9}$$

We must still draw attention of the reader to the fact, that since the factor 2 has been taken in front of the double sum signs, these double sums may not include both permutations of every pair of values n and k, but only one. It may be clearly seen from the second line of eq. (6), from which had been deduced all the double sums of this Report.

2. *The work T of external loads* consists of two principal parts, namely, the work of lateral and axial loads:

$$T = T_L + T_P.$$

T_L is the sum of the works of all types of lateral loading: Q_ρ, $q(c)$, M^σ, and we may separately calculate the work of every type of such load:

a) The work of concentrated lateral loads Q_ρ, is the product of their values and respective transversal displacements y_ρ:

$$T_Q = \sum_{\rho=1}^{\varkappa} Q_\rho \cdot y_\rho = \sum_{\rho=1}^{\varkappa} Q_\rho \cdot \sum_{n=1}^{\infty} b_{\frac{n}{2}} \cdot \sin \frac{n\pi c_\rho}{l};$$

b) The work of the continuous lateral load $q(c)$ will be:

$$T_q = \sum_{n=1}^{\infty} b_{\frac{n}{2}} \int_0^l q \cdot \sin n \frac{\pi c}{l} \cdot dc = \frac{l}{2} \sum_{n=1}^{\infty} \cdot b_{\frac{n}{2}} \cdot \beta_{\frac{n}{2}};$$

c) The work of concentrated couples, whose moments M_σ are acting in the plane of fig. 1, will be:

$$T_m = \sum_{\sigma=1}^{\bar{\varkappa}} M_\sigma \cdot y_\sigma' = \frac{\pi}{l} \sum_{\sigma=1}^{\bar{\varkappa}} M_\sigma \cdot \sum_{n=1}^{\infty} n \cdot b_{\frac{n}{2}} \cos n \frac{\pi h_\sigma}{l}.$$

Hence the general expression for the work of lateral loads of every possible kind will be:

$$T_L = T_Q + T_q + T_m$$

$$= \sum_{n=1}^{\infty} b_{\frac{n}{2}} \left(\frac{l}{2} \cdot \beta_{\frac{n}{2}} + \sum_{\rho=1}^{x} Q_\rho \cdot \sin \frac{n \cdot \pi}{l} c_\rho + \frac{\pi}{l} \sum_{\sigma=1}^{z} M_\sigma \cdot n \cdot \cos \frac{n\pi}{l} h_\sigma \right). \quad (12)$$

It remains to calculate the work of the variable axial loads along the length of the beam. This work will be represented by an integral, taken along the length of the beam, of the axial force P over elementary axial displacements due to bending only. Such a displacement is equal to the difference between the length of an element of the deflection curve and the corresponding element of a straight line, parallel to the axe of abscissae. Denothing this displacement by $d\lambda$, we obtain its value:

$$d\lambda = ds - dx \cong \frac{1}{2} \left(\frac{dy}{dx} \right)^2 \cdot dx .$$

Thus the elementary work of the compressive force will be:

$$dT_P' = P \cdot d\lambda \cong \frac{1}{2} \cdot P \cdot \left(\frac{dy}{dx} \right)^2 dx$$

so that finally:

$$dT_P' = \frac{1}{2} P \frac{\pi^2}{l^2} \left(\sum_{n=1}^{\infty} n^2 \cdot b^2_{\frac{n}{2}} \cdot \cos^2 \frac{n\pi x}{l} + 2 \sum_{\substack{n,k=1 \\ (n \neq k)}}^{\infty} n \cdot k \cdot b_{\frac{n}{2}} \cdot b_{\frac{k}{2}} \cos \frac{n\pi x}{l} \cos \frac{k\pi x}{l} \right) dx .$$

We will assume at first, that the compressive force P is constant along a certain part of the beam, within the limits: $0 < x < z$. Then the work T_P' will be:

$$T_P' = \frac{\pi^2 \cdot P}{2 l^2} \cdot \left[\sum_{n=1}^{\infty} n^2 \cdot b^2_{\frac{n}{2}} \cdot \cos^2 \frac{n\pi x}{l} + 2 \sum_{\substack{n,k=1 \\ (n \neq k)}}^{\infty} n \cdot k \cdot b_{\frac{n}{2}} \cdot b_{\frac{k}{2}} \int_0^z \cos \frac{n\pi x}{l} \cdot \cos \frac{k\pi x}{l} \cdot dx \right]$$

$$= \frac{\pi \cdot P}{2 l} \cdot \sum_{n=1}^{\infty} n \cdot b^2_{\frac{n}{2}} \left(\frac{n \cdot \pi z}{2 l} + \frac{1}{4} \sin \cdot n \frac{2 \pi z}{l} \right) + \frac{\pi P}{2 l} \cdot \sum_{\substack{n,k=1 \\ (n \neq k)}}^{\infty} n \cdot k \cdot b_{\frac{n}{2}} \cdot b_{\frac{k}{2}} \left[\frac{1}{k-n} \cdot \sin (k-n) \frac{\pi z}{l} + \frac{1}{k+n} \cdot \sin (k+n) \frac{\pi z}{l} \right]$$

$$= \frac{\pi^2 \cdot P \cdot z}{4 l^2} \cdot \sum_{n=1}^{\infty} n^2 \cdot b^2_{\frac{n}{2}} + \frac{\pi \cdot P}{8 l} \sum_{n=1}^{\infty} n \cdot b^2_{\frac{n}{2}} \cdot \sin n \frac{2 \pi z}{l}$$

$$+\frac{\pi\cdot P}{2\,l}\cdot\sum_{\substack{n,k=1\\(n\neq k)}}^{\infty} n\cdot k\cdot b_{\frac{n}{2}}\cdot b_{\frac{k}{2}}\left|\frac{1}{k-n}\cdot\sin(k-n)\frac{\pi z}{l}\right.$$

$$\left.+\frac{1}{k+n}\cdot\sin(k+n)\frac{\pi z}{l}\right]. \quad (13)$$

But in reality the axial load P may be considered as constant only along an elementary length, say in the limits:

$$z<x<(z+dz)\,.$$

Hence, to obtain the true work T we must integrate the equation (13) for a variable $P=P(x)$ along the full length of our beam, i.e. within the limits $0<z<l$, in the following way:

$$T_P=\frac{\pi^2}{4\,l^2}\sum_{n=1}^{\infty} n^2\cdot b^2_{\frac{n}{2}}\int_0^l P\cdot dz+\frac{\pi}{8\,l}\cdot\sum_{n=1}^{\infty} n\cdot b^2_{\frac{n}{2}}\int_0^l P\cdot d\left(\sin n\frac{2\,\pi z}{l}\right)$$

$$+\frac{\pi^2}{2\,l}\cdot\sum_{\substack{n,k=1\\(n\neq k)}}^{\infty} n\cdot k\cdot b_{\frac{n}{2}}\cdot b_{\frac{k}{2}}\left\{\int_0^l\frac{P}{k-n}\cdot d\left[\sin(k-n)\frac{\pi z}{l}\right]\right.$$

$$\left.+\int_0^l\frac{P}{k+n}\cdot d\left[\sin(k+n)\frac{\pi z}{l}\right]\right\}$$

$$=\frac{\pi^2}{4\,l^2}\cdot\sum_{n=1}^{\infty} n^2\cdot b^2_{\frac{n}{2}}\int_0^l P\cdot dz+\frac{\pi^2}{4\,l^2}\cdot\sum_{n=1}^{\infty} n^2\cdot b^2_{\frac{n}{2}}\int_0^l P\cdot\cos n\frac{2\,\pi z}{l}\cdot dz$$

$$+\frac{\pi^2}{2\,l}\cdot\sum_{\substack{k,n=1\\(n\neq k)}}^{\infty} n\cdot k\cdot b_{\frac{n}{2}}\cdot b_{\frac{k}{2}}\cdot\left\{\int_0^l P\cdot\cos(k-n)\frac{\pi z}{l}\cdot dz\right.$$

$$\left.+\int_0^l P\cdot\cos(k+n)\frac{\pi z}{l}\cdot dz\right\}$$

$$=\frac{\pi^2}{4\,l}\cdot\left[\sum_{n=1}^{\infty} n^2\cdot b^2_{\frac{n}{2}}\left(p_0+\frac{1}{2}p_n\right)\right.$$

$$\left.+\sum_{\substack{n,k=1\\(n\neq k)}}^{\infty} n\cdot k\cdot b_{\frac{n}{2}}\cdot b_{\frac{k}{2}}\left(p_{\frac{k-n}{2}}+p_{\frac{k+n}{2}}\right)\right]. \quad (14)$$

Now we may write the complete expression of the work T in full length:

$$T=T_L+T_P$$

$$=\sum_{n=1}^{\infty} b_{\frac{n}{2}}\left(\frac{l}{2}\cdot\beta_{\frac{n}{2}}+\sum_{\rho=1}^{\varkappa} Q_\rho\cdot\sin\frac{n\cdot\pi}{l}\cdot c_\rho+\sum_{\sigma=1}^{\tau} M_\sigma\cdot\frac{n\cdot\pi}{l}\cos n\frac{\pi h\sigma}{l}\right)$$

$$+\frac{\pi^2}{4\,l}\left[\sum_{n=1}^{\infty} n^2\cdot b^2_{\frac{n}{2}}\left(p_0+\frac{1}{2}p_n\right)+\sum_{\substack{n,k=1\\(n\neq k)}}^{\infty} n\cdot k\cdot b_{\frac{n}{2}}\cdot b_{\frac{k}{2}}\left(p_{\frac{k-n}{2}}+p_{\frac{k+n}{2}}\right)\right].$$

(15)

We must now calculate the additional work δT produced by the external forces because of a small arbitrary variation of the deflexion curve, due to small changes $\delta b_{\frac{n}{2}}$ of the coefficients $b_{\frac{n}{2}}$. The partial displacement due to one change $\delta b_{\frac{n}{2}}$ only, may be denoted δT_n. These partial displacements are all independent from each other, hence we may study the whole process on the example of one variation $\delta b_{\frac{k}{2}}$, while the others $\delta b_{\frac{k}{2}}$, $(k \neq n)$ are zero. The sum of all such partial values will be the full virtual work:

$$\delta T = \sum_{n=1}^{\infty} \delta T_n .$$

Now we obtain:

$$\delta T_n = \frac{\partial T}{\partial b_{\frac{n}{2}}} \delta b_{\frac{n}{2}} . \tag{16}$$

3. As every component of δT_n depends only on the small arbitrary increase $\delta b_{\frac{n}{2}}$ and, as we saw before, the same concerns the components of δV_n, instead of writing

$$\delta V = \delta T ,$$

we may write:

$$\delta V_n = \delta T_n \qquad (n = 1, 2, \ldots, \infty) . \tag{17}$$

Thus we obtain as many equations, as there are unknown coefficients $b_{\frac{n}{2}}$. By putting values (16) and (9) into eq. (17), we obtain:

$$\frac{l}{2} \cdot \beta_{\frac{n}{2}} + \sum_{\rho=1}^{\varkappa} Q_\rho \cdot \sin\left(\frac{\pi n}{l} \cdot c_\rho\right) + \frac{n \cdot \pi}{l} \sum_{\sigma=1}^{\tau} M_\sigma \cdot \cos\left(\frac{\pi \cdot n}{l} \cdot h_\sigma\right)$$
$$= \frac{\pi^4 \cdot n^2}{2\, l^3} \cdot \left[n^2 \cdot \left(A_0 - \frac{1}{2} A_n\right) - \left(\frac{l^2}{\pi^2} p_0 + \frac{1}{2} p_n\right)\right] \cdot b_{\frac{n}{2}}$$
$$+ \frac{\pi^4 \cdot n}{4\, l^3} \cdot \sum_{\substack{k=1 \\ (k \neq n)}}^{\infty} k \cdot b_{\frac{k}{2}} \left[n \cdot k \cdot \left(A_{\frac{k-n}{2}} - A_{\frac{k+n}{2}}\right) - \frac{l^2}{\pi^2}\left(p_{\frac{k-n}{2}} + p_{\frac{k+n}{2}}\right)\right] . \tag{18}$$

These equations are the *exact solution* of the general problem of plane bending a straight beam on two simple supports, because they allow to calculate all coefficients $b_{\frac{n}{2}}$ one by one; first of all, we must compute the coefficients A_n, p_n, $A_{\frac{k \pm n}{2}}$, $p_{\frac{k \pm n}{2}}$, $\beta_{\frac{n}{2}}$; then, as first approximation,

we compute one by one the coefficients $b_{\frac{n}{2}}$ from the transformed equation:

$$b_{\frac{n}{2}} = \frac{1}{\pi^4 \cdot n^2 \cdot \left[n^2 \cdot \left(A_0 - \frac{1}{2} A_n\right) - \frac{l^2}{\pi^2}\left(p_0 + \frac{1}{2} p_n\right)\right]} \cdot \left\{ 2 l^3 \left[\frac{l}{2} \beta_{\frac{n}{2}} \right.\right.$$

$$\left. + \sum_{\rho=1}^{\varkappa} Q_\rho \cdot \sin\left(\frac{n\pi}{l} \cdot c_\rho\right) + \frac{n \cdot \pi}{l} \cdot \sum_{\sigma=1}^{\tau} M_\sigma \cdot \cos\left(\frac{n\pi}{l} \cdot h_\sigma\right)\right]$$

$$\left. - \frac{\pi^4 \cdot n}{2} \sum_{\substack{k=1 \\ (k \neq n)}}^{\infty} k \cdot b_{\frac{k}{2}} \cdot \left[n \cdot k\left(A_{\frac{k-n}{2}} - A_{\frac{k+n}{2}}\right) - \frac{l^2}{\pi^2}\left(p_{\frac{k-n}{2}} + p_{\frac{k+n}{2}}\right)\right]\right\} \tag{19}$$

neglecting the infinite series in the last term, as it is always much smaller than the first expression in square brackets, because of the factor $2 l^3$ in front of it.

After having calculated in this manner the first approximation of the values of $b_{\frac{n}{2}}$, we put them into the last factor of the right side of eq. (19), and then repeat the evaluation of $b_{\frac{n}{2}}$ as a second approximation, etc.

The series (4) is in most cases sharply convergent, so that there is no need in practice to compute more than two approximations. In general we proceed the calculus so long, until the difference between two consecutive approximate values of $b_{\frac{n}{2}}$,

$$\Delta b^{(i)}_{\frac{n}{2}} = b^{(i+1)}_{\frac{n}{2}} - b^{(i)}_{\frac{n}{2}}$$

becomes less than the allowable error.

If $q = Q_\rho = M_\sigma = 0$, the formula (19) will give the values $b_{\frac{n}{2}} = 0$, as it should be.

There may occur some simplifications in the calculus, if the distribution of the stiffness $E \cdot J$ is such as to give above a certain value of n:

$$A_{n+1} = A_{n+2} = \ldots = 0 .$$

3. Elastic stability

An analysis of the equation (19) will prove, that every coefficient b will become infinite (or eventually indefinite) as soon as the denominator at the right side of the chosen n-th equation of the system (19) becomes zero. There occurs then a case of instability, and the bar will have the tendency to buckle in the shape of n half-waves:

$$p_0 + \frac{1}{2} p_n = \frac{\pi^2 \cdot n^2}{l^2}\left(A_0 - \frac{1}{2} A_n\right) = \frac{\pi^2}{\left(\frac{l}{n}\right)^2} \cdot \left(A_0 - \frac{1}{2} A_n\right) \tag{20}$$

Naturally in most cases of engineering practice the buckling will occur in the form of one half-wave, because of the dominating factor n^2 at the right side of eq. (20). But there may certainly occur special cases, when a form with n half-waves might also become dangerous; but we may accept as a rule, that the most dangerous is the form buckling corresponding to the value $n=1$:

$$p_0 + \frac{1}{2} p_1 = \frac{\pi^2}{l^2} \cdot \left(A_0 - \frac{1}{2} A_1\right) \tag{21}$$

When $A_1 = p_1 = 0$, the eq. (21) reduces to the common Euler formula for $E \cdot J = \text{const}$ and $P = \text{const}$ along the length of the bar. The more general case (20) for $n > 1$ may be of interest to the designer in some exceptional cases only, when the so obtained critical mean compressive load p_0 might become smaller, than some higher component p_n $(n > 1)$. This would be possible only if the value of A_n would be near to A_0, what is very improbable in practice, especially for higher values of n. In any case, we must remember that the very simple conditions (20) and (21) are exactly derived from the laws of Mechanics, and include neither simplifications, nor approximations of any sort, although they are valable for the most general case of load and stiffness distributions.

On the contrary, the eq. (19) involving infinite series, bear an approximate character; the conditions of stability, although deduced from these equations, are absolutely exact, and throw some new light upon the instability effects in beams.

The condition (20) shows that for the buckling of a beam in the form of n half-waves, only the n-th harmonics of the axial load and stiffness distributions are decisive, and other harmonics have no influence on this effect at all. This bears a deep analogy, to the effect of simple forced harmonic vibrations, which has been pointed out before in some more special case by M. T. Huber ([3]).

Therefore, we dare say, that the expansion into a trigonometric series is not only a convenient method of mathematical computation of bending problems of compressed beams, but this method divulges some new aspects of the effect of instability itself, and has a deeper meaning in itself, as it allowed to discover a new general law of static instability of inhomogeneous compressed beams.

4. Appendix

For practical use of equations (19), (20), (21) we need a method of expanding functions $E \cdot J$, q, P in trigonometric series. This may be done by means of several methods, as for example: by Fischer-Hinnen ([4]), or by F. M. Lewis ([5]) and, especially for lower values of n, by P. V. Melentiev ([6]).

([3]) M. T. Huber, *On an analogy of some effects of stability of slightly curved elastic bars with a simple case of forced vibrations* (*Polish Academy of Sciences*, P. A. U., Kraków, Poland, 1934) (Polish).

([4]) Fischer-Hinnen, *Elektrotechnische Ztg.*, Vol. 22 (1901), pages 396-398 (German).

A. Hussmann, *Rechnerische Varfahren zur harnonischen Analyse und Synthese*, Berlin, 1938 (German).

([5]) F. M. Lewis, *A method of harmonic analysis* (*J. Appl. Mech.*, Vol. 2 [1935], Nr. 4, pages 137-140).

([6]) P. V. Melentiev, *Some New Methods in Approximate Calculus*, Leningrad and Moscow, 1937 (see pages 139-147) (Russian).

The harmonic synthesis of the deflection curve, after obtaining the values of $b_{\frac{n}{2}}$, may be done by means of Howard's circles, or by simple computation from goniometric tables.

Résumé

L'auteur examine dans ce mémoire des poutres dont les centres des diverses sections droites constituent une ligne droite et les axes principaux de ces mêmes sections deux plans orthogonaux entre eux; toutes les charges et réactions extérieures se trouvent dans l'un de ceux-ci.

Ces hypothèses admises, la rigidité à la flexion peut être variable, même avec solution de continuité. Les charges axiales peuvent également varier. En exprimant tous les paramètres sous la forme de séries trigonométriques, variables le long de la portée, on obtient la résolution de la ligne élastique sous la forme d'une autre série trigonométrique. On obtient ainsi un critère très simple pour la stabilité élastique [Eq. (20)].

Zusammenfassung

Bei den Balken, die in diesem Beitrag betrachtet werden, liegen die Schwerpunkte aller Querschnitte auf einer Geraden und die Hauptachsen bilden zwei aufeinander senkrecht stehende Ebenen, deren eine auch die äusseren Lasten und die Reaktionen enthält. Unter diesen Voraussetzungen kann die Biegesteifigkeit noch beliebig kontinuierlich oder diskontinuierlich veränderlich sein. Auch die Axiallasten können sich beliebig ändern. Indem alle über die Spannweite veränderlichen Parameter des Problems in trigonometrische Reihen entwickelt werden, erhält man die Lösung der Gleichung der elastischen Linie auch in der Form von trigonometrischen Reihen. Zugleich folgt aus dieser Entwicklung noch ein sehr einfaches Kriterium für die elastische Stabilität [Gl. (20)].

Summary

Beams taken under consideration in this paper have all cross-section centers lying on one straight line, all principal axes of cross-sections are contained in two perpendicular planes, one of which contains all external loads and reactions acting on the beams.

Under assumption of these restrictions, the stiffness in bending may be arbitrarily continuously or discontinuously variable. The axial loads may also vary arbitrarily. By means of expansion into trigonometric series of all parameters of this problem, variable along the span, a solution for the line of elastic deflection is obtained, in the shape of a trigonometric series. By the way, a very simple criterion for the elastic stability [Eq. (20)] is obtained.

Id3

Procédé pour augmenter la rigidité à la torsion des poutrelles en I

Eine Methode zur Vergrösserung der Verdrehungssteifigkeit der doppelflanschigen Balken

Method to increase rigidity in torsion of double-flanged beams

H. NYLANDER
Techn. Dr Professor, Technische Hochschule, Stockholm

Für einen auf Verdrehen beanspruchten Balken mit dünnwandigem, offenem Querschnitt gilt unter Voraussetzung, dass die Querschnittsform unverändert bleibt, die Gleichung [1]

$$M_T = C \frac{d\varphi}{dz} - C_w \frac{d^3\varphi}{dz^3} \tag{1}$$

wo

M_T = Verdrehungsmoment ;
C = GK = Verdrehungssteifigkeit (Nach St. Venant) ;
C_w = Wölbwiderstand des Querschnittes ;
φ = Verdrehungswinkel ;
z = Koordinaten-Achse längs der Balken-Achse.

Bei einem doppelflanschigen Balken drückt das zweite Glied auf der rechten Seite in Gl. (1) die Einwirkung der Flanschenbiegung aus.

Der Balken wird nach Abb. 1 verformt. Der obere und der untere Flansch bilden in der Horizontalprojektion den Winkel

$$\theta = h_t \frac{d\varphi}{dz} \tag{2}$$

wo h_t = Abstand zwischen den Flanschenschwerpunkten.

Wenn man den oberen und den unteren Flansch mit einer Versteifung

---

(1) Die Einwirkung der Querschnittsverformung wurde in einigen Sonderfällen vom Verfasser untersucht. Siehe H. Nylander, Diss. Stockholm 1942, sowie H. Nylander, *Drehungsvorgänge und gebundene Kippung bei geraden, doppeltsymmetrischen I-Trägern*, I. V. A., Abh. Nr. 174, Stockholm 1943.

Die Gl. (1) wurde für den doppeltsymmetrischen I-Träger zuerst von Timoshenko und, für beliebigen Querschnitt, von Kappus angegeben.

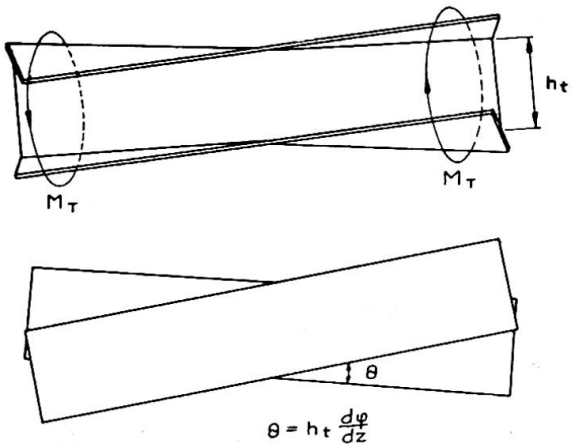

Abb. 1. Verdrehungsverformung eines doppelflanschigen Balkens.

verbindet, wird der Winkel θ vermindert und auch $\frac{d\varphi}{dz}$ im Versteifungsquerschnitt wird verringert. Die seitliche Biegung der Flanschen wird elastisch verhindert (siehe Abb 2 *c*). Die Flanschen werden von Biegemomenten M belastet, die in der Flanschenebene wirken.

M ist proportional zu $\frac{d\varphi}{dz}$ im Versteifungsquerschnitt

$$M = c \frac{d\varphi}{dz} \tag{3}$$

wo *c* eine Konstante ist.

Die sprungweise Veränderung von $\frac{d^2y}{dz^2}$ an der Aussteifung (y = seitliche Durchbiegung des Flansches) ist

$$\Delta \frac{d^2y}{dz^2} = \frac{M}{D} \tag{4}$$

wo D = die seitliche Biegesteifigkeit des Flansches.

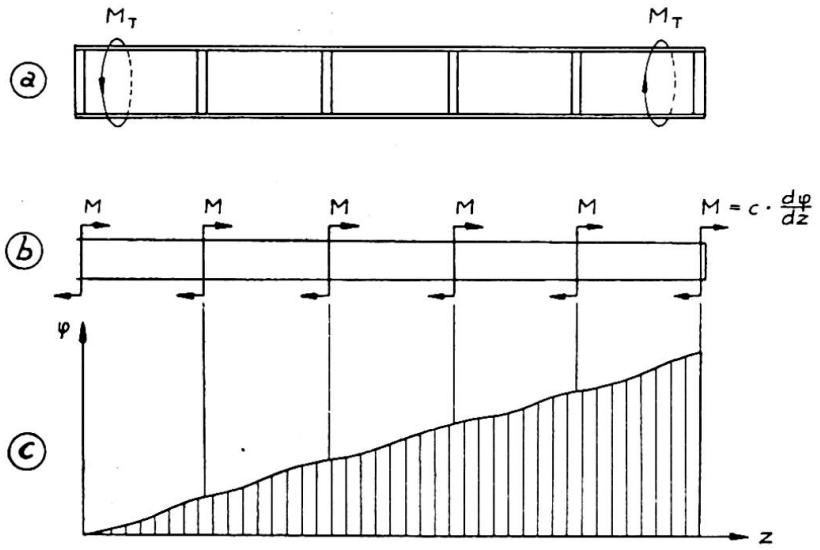

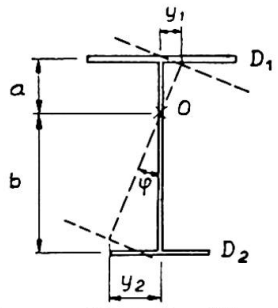

Abb. 2 (links). Verdrehung eines Balkens mit wölbungsverhindernden Aussteifungen:
a) Torsionsbelastung eines Balkens;
b) Belastung der Flanschen durch Momente, die von der Wölbungsverhinderung durch die Aussteifungen herrühren;
c) Verlauf des Verdrehungswinkels φ längs der Balkenachse.

Abb. 3 (rechts). Bezeichnungen.

Bei einem Balken mit ungleichen Flanschen gilt bei der Verdrehung (siehe Abb. 3)

$$y_1 = a \cdot \varphi = \frac{D_2}{B_1} \cdot h_t \cdot \varphi \tag{5a}$$

und

$$y_2 = b \cdot \varphi = \frac{D_1}{B_1} \cdot h_t \cdot \varphi \tag{5 b}$$

wo B_1 = die gesamte seitliche Biegesteifigkeit des Balkens.

Man erhält daraus

$$\frac{y_1}{y_2} = \frac{D_2}{D_1} . \tag{6}$$

Die Gl. (4) wird für jeden Flansch ausgeschrieben

$$\Delta \frac{d^2 y_1}{dz^2} = \frac{M}{D_1} \tag{4 a}$$

$$\Delta \frac{d^2 y_2}{dz^2} = \frac{M}{D_2} \tag{4 b}$$

woraus

$$\frac{\Delta \dfrac{d^2 y_1}{dz^2}}{\Delta \dfrac{d^2 y_2}{dz^2}} = \frac{D_2}{D_1} . \tag{7}$$

Durch Vergleich der Gl. (6) und (7) ersieht man, dass die durch die Momente M bedingte Verformung eine Verdrehungsverformung ist.

Die Gl. (4*a*), (4*b*), (5*a*) und (5*b*) ergeben

$$\Delta \frac{d^2 \varphi}{dz^2} = \frac{1}{h_t} \cdot \frac{B_1}{D_1 D_2} \cdot M . \tag{8}$$

Da

$$M = c \frac{d\varphi}{dz}$$

wo c eine Konstante ist, kann Gl. (8) wie folgt geschrieben werden

$$\Delta \frac{d^2 \varphi}{dz^2} = \frac{1}{h_t} \frac{B_1}{D_1 D_2} \cdot c \cdot \frac{d\varphi}{dz} . \tag{9}$$

Diese Gleichung ist die grundlegende Gleichung für die Berücksichtigung der wölbungsverhindernden Einwirkung der Aussteifungen.

Die Grösse der Konstante c ist von der Formgebung der Aussteifungen abhängig. Durch eingehende Untersuchungen hat der Verfasser gezeigt, dass die Aussteifung nach Abb. 4 anderen Gestaltungen überlegen ist ([1]).

Für diese Aussteifung erhält man

$$c = C_H$$

wo C_H = die Verdrehungssteifigkeit des Hohlquerschnittes ist.

Die Gl. (9) wird also zu

$$\Delta \frac{d^2 \varphi}{dz^2} = m \frac{d\varphi}{dz} \tag{9'}$$

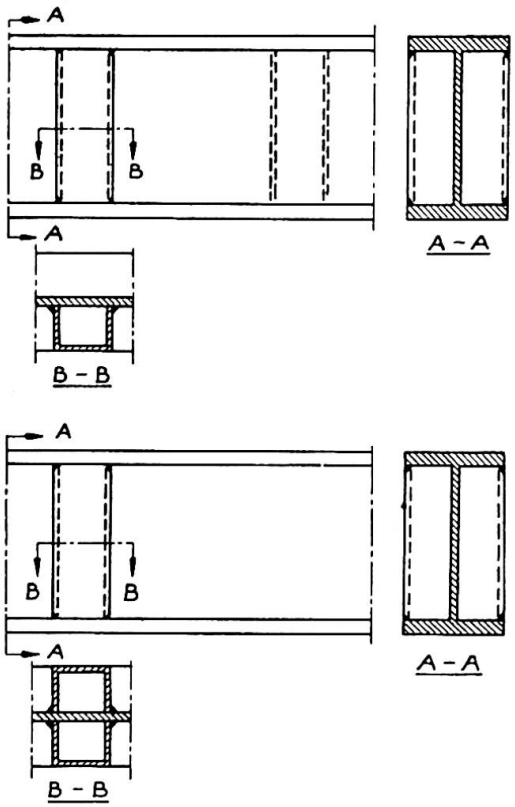

Abb. 4. Formgebung der wölbungsverhindernden Aussteifungen.

wo

$$m = \frac{1}{h_t} \cdot \frac{B_1}{D_1 D_2} C_H \,. \tag{10}$$

Die allgemeine Theorie für die Berücksichtigung der Einwirkung von mehreren Aussteifungen in gleichen Abständen bei doppeltsymmetrischen I-Balken ist in meiner Dissertation angegeben ([2]).

Diese Dissertation enthält auch eine Näherungslösung, die für die meisten praktischen Fälle genügend genau ist. Hier wird nur das Ergebnis dieser Lösung kurz zusammengefasst und modifiziert, so dass es Gültigkeit auch für einfachsymmetrischen Balken erhält.

Diese Näherungslösung zeigt, dass die Einwirkung der wölbungsverhindernden Aussteifungen durch eine Erhöhung der reinen Verdrehungssteifigkeit C in Gl. (1) ausgedrückt werden kann :

$$M_T = C_r \frac{d\varphi}{dz} - C_w \frac{d^3\varphi}{dz^3} \tag{10'}$$

wo

$$C_r = \frac{C}{1 - \dfrac{\dfrac{m}{2k}\,\dfrac{1}{k\lambda}}{1 + \dfrac{m}{2k}\coth k\lambda}} \tag{11}$$

m ist durch Gl. (10) bestimmt und k erhält man aus

$$k = \sqrt{\frac{C}{C_w}} = \frac{1}{h_t}\sqrt{\frac{CB_1}{D_1 D_2}} \,. \tag{12}$$

$2\,\lambda =$ Abstand zwischen den Aussteifungen.

Die Erhöhung der Verdrehungssteifigkeit durch die wölbungsverhindernden Aussteifungen vergrössert die Kippstabilität und vermindert die

([2]) Siehe Fussnote ([1]).

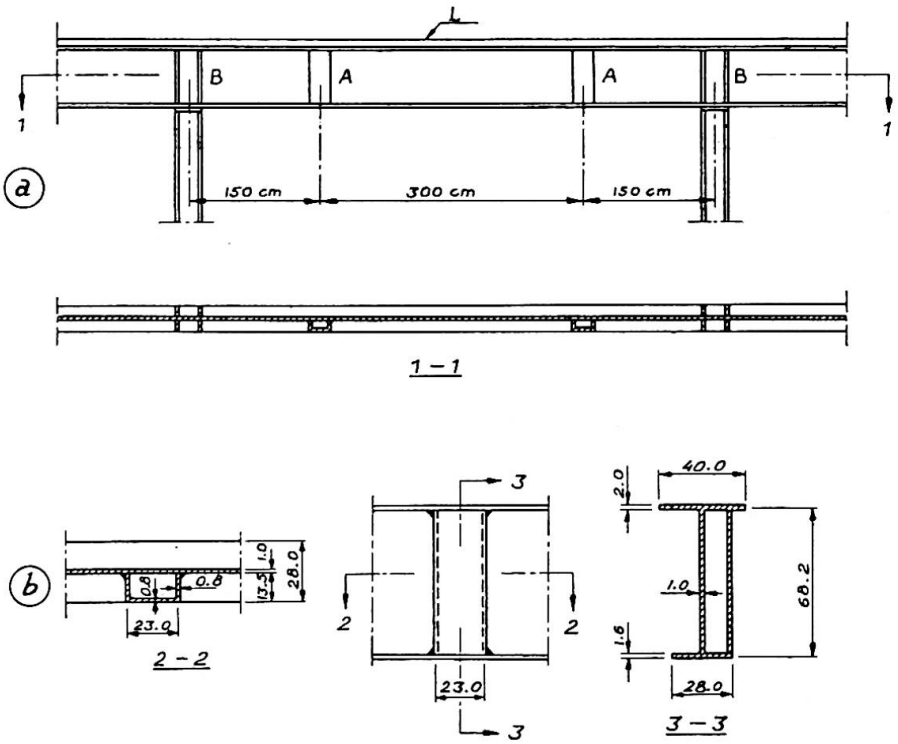

Abb. 5. Beispiel :

a) Allgemeine Anordnung :
A = Wölbungsverhindernde Versteifung;
B ⊥ Flachstahlaussteifung;
L = Laufschiene.

b) Einzelheiten der wölbungsverhindernden Versteifung.

Spannungen, die von den Verdrehungsmomenten herrühren. Als Anwendungsbeispiel wird in Abb. 5 ein Kranbahnbalken gezeigt. Die wölbungsverhindernden Versteifungen sind nur in den Viertelpunkten angebracht. Dadurch werden die Verdrehungsspannungen am grössten an diesen Stellen, wo die durch vertikale Biegung bedingten Spannungen klein sind. In der Feldmitte, wo die gefährlichsten gesamten Spannungen auftreten, werden die von der Verkehrslast verursachten Verdrehungsspannungen durch die Versteifungen von 620 auf 230 kg/cm² vermindert. Ausserdem wird die Kippstabilität des Balkens wesentlich vergrössert.

Résumé

Le voilement d'une poutre soumise à torsion est fonction, en règle générale, de sa rigidité à la torsion. En plus, les tensions résultantes sont relativement élevées dans certaines constructions, notamment pour les poutres de ponts roulants. La rigidité à la torsion peut être augmentée, tout en réduisant les tensions, grâce à des raidisseurs. La déformation latérale des semelles est évitée et ainsi la déformation par torsion est remplacée par une déformation par flexion pure des semelles. Ce mémoire étend la théorie déjà exposée par l'auteur concernant les poutrelles symétriques [voir note (1)] au cas d'une poutrelle dissymétrique et résume le résultat d'une solution approchée.

Zusammenfassung

Mit der geringen Verdrehungssteifigkeit der gewöhnlichen eisernen I-Balken hängt deren Neigung zum Kippen zusammen. Ausserdem sind die Verdrehungsspannungen bei gewissen Konstruktionen z.B. Kran-

bahnbalken verhältnismässig gross. Eine Möglichkeit, die Verdrehungssteifigkeit zu vergrössern und die Verdrehungsspannungen zu vermindern besteht in der Verwendung wölbungsverhindernder Versteifungen. Die bei der Verdrehung auftretende seitliche Ausbiegung der Flanschen wird dadurch elastisch verhindert, so dass die reine Verdrehungsverformung in Biegung der Flanschen umgesetzt wird. Die vom Verfasser früher entwikkelte Theorie für doppeltsymmetrische I-Balken (siehe Fussnote 1) wird in diesem Bericht auf einfachsymmetrische I-Balken ausgedehnt und das Ergebnis einer Näherungslösung wird kurz zusammengefasst.

Summary

Ordinary steel I girders are liable to lateral buckling in torsion on account of their low torsional rigidity. Moreover, the torsional stresses are relatively high in some structures, e.g. crane beams. The torsional rigidity can be increased and the torsional stresses can be reduced by means of warping stiffeners. The lateral deflection of the flanges is elastically prevented by these stiffeners, so that the pure torsional deformation is converted into bending of the flanges. In this paper, the theory of double symmetrical I girders previously advanced by the Author, see footnote 1, is extended to single symmetrical I girders, and the result of an approximate solution is briefly summarised.