Zeitschrift: IABSE congress report = Rapport du congrès AIPC = IVBH Kongressbericht

Band: 2 (1936)

Artikel: The stresses imposed on a structure by a yielding subsoil

Autor: Kögler, F.

DOI: https://doi.org/10.5169/seals-3358

Nutzungsbedingungen

Die ETH-Bibliothek ist die Anbieterin der digitalisierten Zeitschriften auf E-Periodica. Sie besitzt keine Urheberrechte an den Zeitschriften und ist nicht verantwortlich für deren Inhalte. Die Rechte liegen in der Regel bei den Herausgebern beziehungsweise den externen Rechteinhabern. Das Veröffentlichen von Bildern in Print- und Online-Publikationen sowie auf Social Media-Kanälen oder Webseiten ist nur mit vorheriger Genehmigung der Rechteinhaber erlaubt. Mehr erfahren

Conditions d'utilisation

L'ETH Library est le fournisseur des revues numérisées. Elle ne détient aucun droit d'auteur sur les revues et n'est pas responsable de leur contenu. En règle générale, les droits sont détenus par les éditeurs ou les détenteurs de droits externes. La reproduction d'images dans des publications imprimées ou en ligne ainsi que sur des canaux de médias sociaux ou des sites web n'est autorisée qu'avec l'accord préalable des détenteurs des droits. En savoir plus

Terms of use

The ETH Library is the provider of the digitised journals. It does not own any copyrights to the journals and is not responsible for their content. The rights usually lie with the publishers or the external rights holders. Publishing images in print and online publications, as well as on social media channels or websites, is only permitted with the prior consent of the rights holders. Find out more

Download PDF: 22.11.2025

ETH-Bibliothek Zürich, E-Periodica, https://www.e-periodica.ch

VIII 1

The Stresses Imposed on a Structure by a Yielding Subsoil.

Beanspruchung eines Bauwerkes auf einem nachgiebigen Untergrunde.

Sollicitations dans un ouvrage reposant sur un sol compressible.

Professor Dr. Ing. F. Kögler †,
ord. Professor an der Bergakademie, Freiberg/Sa.

The considerations which follow below are based on the assumption of a subsoil which, when loaded, does not spread or escape laterally, but is compressed.

I. The use of a "load bundle".

If the structure possessed no bending resistance at all but was completely loose and moveable — made up as it were of disconnected pieces — each part of it would sink in exact proportion to the amount that the subsoil was compressed under load. Such compression would occur without any

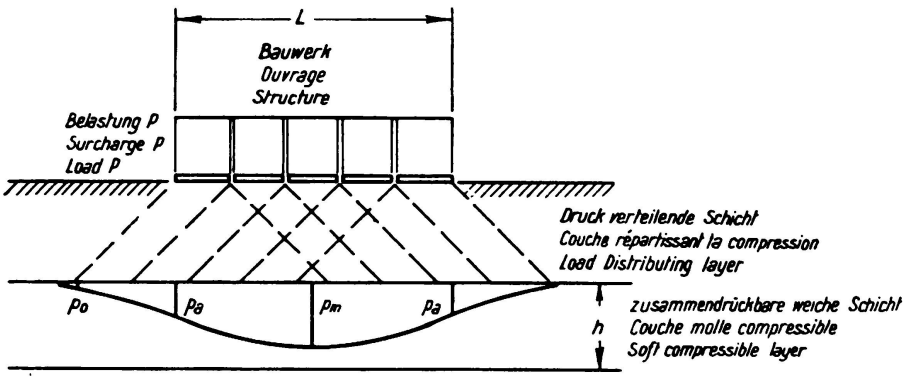

Fig. 1.

stiffness being effective. We will apply the term "load bundle" to this mode of loading of the ground by a loose structure of the kind described or by a number of unconnected units.

In such a case the distribution of pressure over the ground has no reference to stiffness of the structures, but will normally occur as illustrated in Fig. 1. At any given depth in a soft compressible stratum, there will occur pressures as represented, that is to say in the middle there will be the heaviest pressure p_m;

under the ends of the structure the pressure p_a and at the sides the smaller pressures p_o. The distribution of pressure may be determined by the usual formulae, or alternatively *Steinbrenner*'s diagram.

The compression of the soft stratum also will be in accordance with the change of pressures from p_m to p_a and p_o over the surface.

The structure must sink in a way which corresponds with the compression suffered by the soft layer; the sinking will be greater at the middle, as z_m, and less and the two ends, as z_a (Fig. 2). No account will be taken here of any equalising effect due to a pressure-distributing layer above the soft layer, such as might cause a certain reduction in z_m and an increase in z_a.

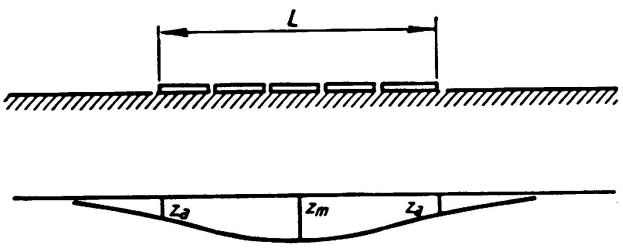

Fig. 2.

The difference between the sinking z_m at the middle and the sinking z_a at the two ends of the structure represents the amount of bending undergone by the structure made up of separate unconnected pieces, and the latter must follow the sinking without being able to offer any resistance to it since, by hypothesis, there is no stiffness at all. The amount of bending suffered by the structure is therefore given by

$$s = z_m - z_a \tag{1a}$$

II. Stiff structure.

If, however, the structure possesses stiffness it will not participate fully in this bending action, but will exert a certain resistance against it, depending on the degree of stiffness. As a result the middle of the structure will not sink so far, or, in other words, the ground below the middle will not settle down to the full extent z_m, but only to an extent measured by $z_m - \Delta z_m$. Consequently the structure itself will carry a portion Δp_m of the pressure p_m, in virtue of its bending resistance, and the ground will be correspondingly relieved of load to an extent Δp_m. The structure will be able to carry the amount of load Δp_m only by bearing upon the ground at its two ends, like a beam upon two supports; hence these will be loaded to an extent Δp_m in addition to their existing loads p_a. At the end, therefore, the soft stratum will suffer a greater amount of compression than z_a, amounting, for instance, to $z_a + \Delta z_a$.

There will still be a greater depression of the middle of the structure than at its two ends, but the difference — that is to say, the deflection of the structure — is no longer as great as in the case of the "load bundle" now amounting only to

$$\begin{aligned} s &= z_m - \Delta z_m - (z_a + \Delta z_a) \\ &= (z_m - z_a) - (\Delta z_m + \Delta z_a) \end{aligned} \tag{1b}$$

This reduction in the deflection is brought about by the stiffness of the structure, by virtue of which the load Δp_m is picked up at the middle and is transferred to the two ends after the manner of a beam resting on two supports,

which thus impose an additional load Δp_a on the foundation. The loading of the structure is represented in Fig. 3.

As regards the *distribution* of the load Δp_m and the reactions of the supports Δp_a it may, of course, be necessary to make certain assumptions, and this applies

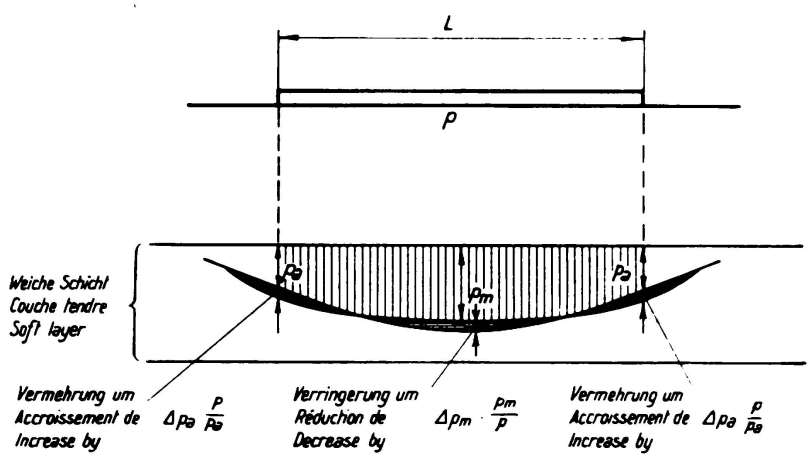

Fig. 3.

also to their relative magnitudes. The assumption represented in Fig. 4 has been found suitable; namely a parabolic distribution of the pressure with the outer quarters of the length of the structure L acting as supports, and the central half of the length carrying load. Since the sum of the supporting pressures Δp_a must be equal to the sum of the load pressures Δp_m we obtain, on this assumption:

$$\frac{2}{3} \cdot \Delta p_m \cdot \frac{1}{2} L = 2 \left(\Delta p_a \cdot {}^2/_3 \cdot {}^1/_4 L\right)$$

$$\Delta p_m = \Delta p_a = \Delta p. \qquad (2)$$

and the span of the beam considered as loaded and carried on two supports will be $l = {}^3/_4 L$.

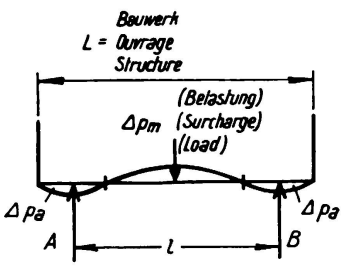

Fig. 4.

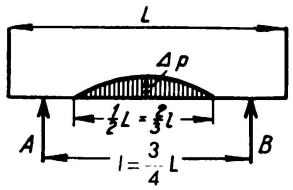

Fig. 5.

III. Load borne by the structure.

To determine the magnitude of Δp reference may be made to the consideration that the deflection of the beams loaded as in Fig. 4 admits of calculation in the two following ways:

1) As the deflection of a beam carried on two supports in accordance with the usual formulae of the strength of materials (Value f_L; see IV.)

2) As the difference in the amount of compression undergone by the substratum,

a) under the middle of the structure as a result of the pressure $p_m - \Delta p$ and

b) under the ends of the structure as a result of the loading $p_a + \Delta p$

calculated according to the rule for compression of the foundation. (Value s; see V.) The respective values f_L and s must be equal to one another.

IV. Calculation of the deflection of the beam (according to III, 1).

The beam is loaded and supported as represented in Fig. 4. Instead of assuming that it is supported by a reaction pressure Δp_a uniformly distributed over the two lengths $^1/_4$ L let us assume simply that it is resisted by isolated reactions A and B. The span will then be $l = {}^3/_4$ L and the loaded length will be $^1/_2$ L $= {}^2/_3$ l. It will be correct to calculate the deflection at the middle of the beam in the whole length L by comparison with the parts projecting over its two ends.

a) *Deflection of the beam of span l.*

Since the treatment is based entirely on assumptions there will be no object in making a laborious and accurate calculation. The loading assumed here in accordance with Fig. 5 may be regarded as a compromise between an isolated load as

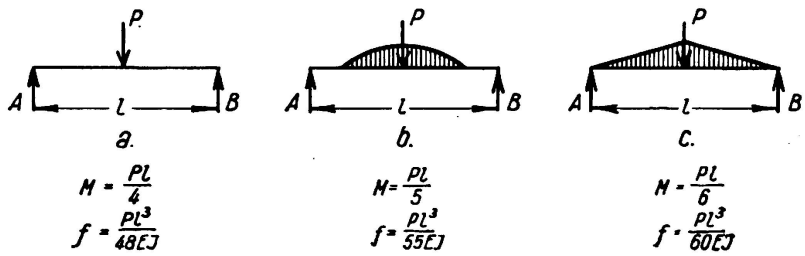

Fig. 6.

in Fig. 6a, and a triangular loading as in Fig. 6c. It may therefore be assumed that

$$\text{Bending moment } M = \frac{Pl}{5} \tag{3}$$

$$\text{Deflection } f = \frac{Pl^3}{55\,EJ} \tag{4}$$

whence

$$P = {}^2/_3 \cdot \Delta p \cdot {}^2/_3\, l \cdot t = {}^4/_9\, \Delta p \cdot l \cdot t$$

$$M = \frac{({}^4/_9 \cdot \Delta p \cdot l \cdot t)\, l}{5} = {}^4/_{45} \cdot \Delta p \cdot l^2 \cdot t = \frac{1}{20} \cdot \Delta p \cdot L^2 \cdot t \tag{5}$$

$$f_l = \frac{{}^4/_9 \cdot \Delta p \cdot l \cdot t \cdot l^3}{55\,EJ} = \frac{4}{495} \cdot \Delta p \cdot \frac{l^4 \cdot t}{EJ} = \frac{\Delta p \cdot l^4 t}{124\,EJ} \tag{6}$$

Here t represents the depth of the loading and of the supporting portion of the structure, measured at right angles to the plane of the drawing.

I is the moment of inertia of the supporting strip of the structure of this depth.

E is the modulus of elasticity of the material used in the structure.

b) *Deflection of the beam in the length L.*

For the purpose of consideration in accordance with III, use is made of the difference in deflection between the middle and the two ends of the structure, or in other words the deflection of the beam over the length L. This may be obtained from the foregoing as shown in Fig. 7, by reference to the following consideration. The deflection f_l appears as a movement of the free ends of the beam of span L over its supports. It may be assumed that the line of bending under l is a parabola as in Fig. 7 and the slope of the tangents thereto will be given by $\tan \alpha = \frac{2 f^l}{l/2}$.

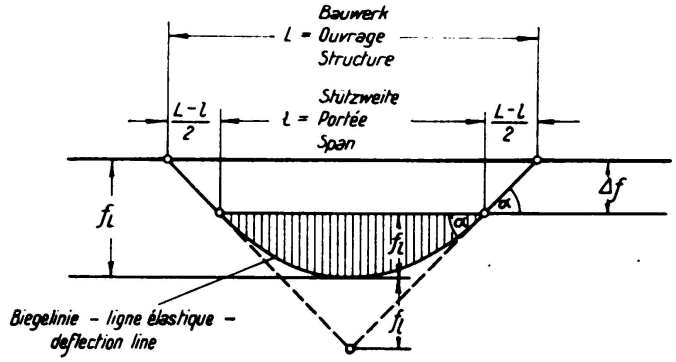

Fig. 7.

Moreover

$$\Delta f = \frac{L-l}{2} \cdot \operatorname{tg} \alpha = \frac{L-l}{2} \cdot \frac{2 f_l}{l/2} = 2 f_l \cdot \frac{L-l}{l}$$

$$f_L = f_l + \Delta f = f_l + 2 f_l \cdot \frac{L-l}{l} = \frac{f_l}{l}(l + 2L - 2l)$$

$$= f_l \cdot \frac{2L-l}{l} = f_l \left(2 \frac{L}{l} - 1\right).$$

and putting $l = {}^3/_4\, L$ we obtain

$$f_L = \frac{5}{3} f_l = \frac{5}{3} \cdot \frac{\Delta p \cdot l^4 t}{124\, EJ} = \underline{\frac{5}{372} \frac{\Delta p l^4 \cdot t}{EJ}}$$

$$f_L = \frac{5}{372} \cdot \frac{\Delta p \cdot L^4 \cdot t}{EJ} \cdot ({}^3/_4)^4 = 0.00426 \frac{\Delta p L^4 t}{EJ} \qquad (7)$$

V. Compression undergone by the soft stratum in consequence of the pressures imposed on it by the structure (according to III, 2).

According to Fig. 1 the soft stratum suffers compression which, taking account of the distribution of pressures, amounts to p_m under the middle of the structure and p_a under its ends, when the loading of the ground under the base of the structure is p. According to Fig. 4, as a result of the stiffness of the structure the loading underneath it is reduced by an amount Δp_m at the centre and increased by an amount Δp_a at the ends, from which Equation (2) gave $\Delta p_m = \Delta p_a = \Delta p$.

This change in the pressure on the ground underneath the structure further entails a change of pressure on the soft stratum in the subsoil, and it is assumed that these changes are similar in character. This assumption serves to express:

1) The distribution of pressure lengthways along the structure as indicated in Fig. 1, and, at the same time.
2) The distribution of pressure in depth, vertically to the plane of the drawing in Fig. 1.

In other words the distribution of pressure through the distributing layer is such that the base pressure p under the structure changes to p_m and p_a as far as the compressible layer, in accordance with Fig. 1.

The true changes in pressure within the depth of the soft layer will, therefore, be:

$$\text{In the middle: } \Delta p_m \cdot \frac{p_m}{p} \quad \text{at the ends: } \Delta p_a \cdot \frac{p_a}{p}$$

$$= \Delta p \cdot \frac{p_m}{p} \qquad\qquad = \Delta p \cdot \frac{p_a}{p}$$

and the corresponding pressure *on* the soft layer will be:

$$\text{In the midde: } p_m - \Delta p \cdot \frac{p_m}{p} \quad \text{at the ends: } p_a + \Delta p \cdot \frac{p_a}{p}$$

Referring to Fig. 3, the compression undergone by the soft layer of depth h will amount to

$$\text{In the middle: } \left(p_m - \Delta p \frac{p_m}{p}\right) \cdot \frac{h}{K_m} \quad \text{at the ends: } \left(p_a + \Delta p \cdot \frac{p_a}{p}\right) \cdot \frac{h}{K_a}$$

Here h denotes the depth magnitude, thickness of the soft layer, while K_m and K_a represent the density figures for the ground in the soft layer below the middle of the structure and at its two ends respectively, in accordance with the extent of the compressed zone (to be taken from the pressure diagram for the soil in question). The difference between these two compressions corresponds to the deflection undergone by the structure:

$$s = \left(p_m - \Delta p \cdot \frac{p_m}{p}\right) \frac{h}{K_m} - \left(p_a + \Delta p \cdot \frac{p_a}{p}\right) \cdot \frac{h}{K_a}. \tag{8}$$

VI. Determination of Δp.

According to III we have $f_L = s$ or

$$\left(p_m - \Delta p \cdot \frac{p_m}{p}\right) \frac{h}{K_m} - \left(p_a + \Delta p \cdot \frac{p_a}{p}\right) \frac{h}{K_a} = 0.00426 \cdot \frac{\Delta p \cdot L^4 t}{EJ}.$$

whence it follows that

$$\Delta p = \frac{h\left(\frac{p_m}{K_m} - \frac{p_a}{K_a}\right)}{0.00426 \cdot \frac{L^4 t}{EJ} + \frac{h}{p}\left(\frac{p_m}{K_m} + \frac{p_a}{K_a}\right)} \tag{9}$$

Since in most cases $K_m = K_a = K$ we may simplify this as follows:

$$\Delta p = \frac{\frac{h}{K} \cdot (p_m - p_a)}{0.00426 \cdot \frac{L^4 t}{EJ} + \frac{p_m + p_a}{p} \cdot \frac{h}{K}} = \frac{p_m - p_a}{0.00426 \cdot \frac{L^4 \cdot t \cdot K}{EJ \cdot h} + \frac{p_m + p_a}{p}} \tag{10}$$

VII. Results.

The share of load Δp carried by the structure and the resulting bending stresses set up in the latter are governed by:

1) The difference between the pressures in $p_m - p_a$ (Fig. 1) on the soft layer in the subsoil .The share of load Δp increases in proportion to the difference.
2) The length L of the structure. The share of load Δp falls off very rapidly as L increases, and for very large values of L we have $\Delta p = 0$.
3) The depth h of the soft layer, in accordance with which the share of load Δp is increased.
4) The density figure K of the soft layer; the share of load Δp decreases as this value increases.
5) The stiffness E J of the structure: the share of load Δp increases with this function, for a totally slack (limp) structure would carry no load Δp and consequently would have no bending stresses. A stiff structure would carry a greater load, as a result of the ground being compressible, than a less stiff structure.
6) This last statement does not imply that the bending stresses in the stiffer structure will necessarily be greater than in the loose structure. The following numerical examples will indicate a contrary result.

VIII. Numerical example.

Assume a reinforced concrete container, as in Fig. 8, measuring 24 m long $\times$ 12 m wide and 4 m deep, with a base pressure of $p = 4.5$ tons per m^2, or

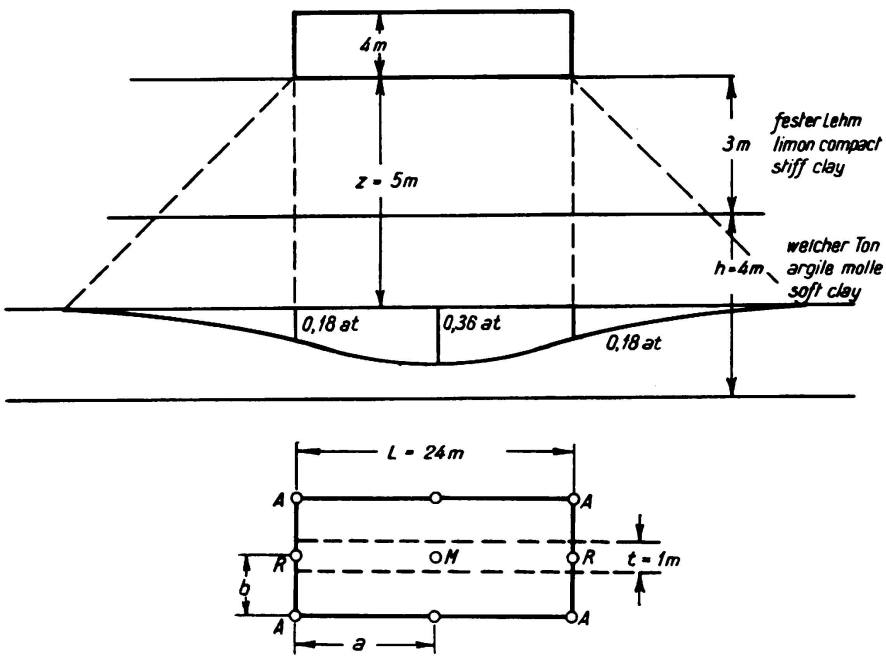

Fig. 8.

0.45 atmospheres. Assume that the ground consists of 3 m of hard clay and below this 4 m of soft clay having a stiffness figure of $K = 60$ kg/cm² within the

region of increased pressure. Calculating the distribution of pressure by *Steinbrenner*'s method we have:

$$\frac{a}{b} = 2, \quad \frac{z}{b} = \frac{5}{6};$$

$$\sigma_R = 0.18 \text{ at},$$
$$\sigma_M = 0.36 \text{ at}.$$

The base of the container is stiffened by ribs at 3 m centres dimensioned as in Fig. 9. Considering a strip of t = 1 m width running along the longitudinal axis of the container, we may write

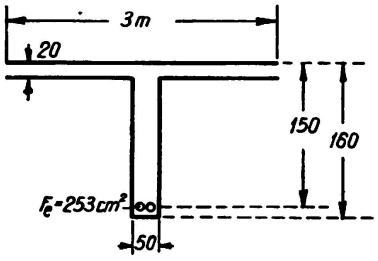

Fig. 9.

$$J = 15.2 \cdot 10^6 \text{ cm}^4,$$
$$F_e = 84.3 \text{ cm}^2;$$
$$W_b = 2.37 \cdot 10^5 \text{ cm}^3, \quad W_e = 1.78 = 10^5 \text{ cm}^3;$$
$$E = 1.5 \cdot 10^5 \text{ at}$$

and we obtain the following relation for the loading from Equation (10).

$$\Delta p = \frac{0.36 - 0.18}{0.00426 \cdot \dfrac{2400^4 \cdot 100 \cdot 60}{1.5 \cdot 10^5 \cdot 15.2 \cdot 10^6 \cdot 400} + \dfrac{0.36 + 0.18}{0.45}}$$

$$= \frac{0.18}{0.93 + 1.2} = \frac{0.18}{2.13} = 0.085 \text{ atm} = \mathit{0.85\ t/m^2}.$$

According to Equation (5) the stresses in the ribs can be worked out as follows:

$$M = \frac{1}{20} \cdot 0.85 \cdot 24^2 \cdot 1 = \mathit{24.5\ mt}$$

$$\sigma_b = \frac{24.5 \cdot 10^5}{2.37 \cdot 10^5} = \mathit{10.3\ kg/cm^2}, \qquad \sigma_e = 15 \cdot \frac{24.5 \cdot 10^5}{1.78 \cdot 10^5} = \mathit{206\ kg/cm^2}.$$

From Equation (7) the deflection of the container over its whole length (L = 24 m) is

$$f_L = \frac{4.26 \cdot 8.5 \cdot 3.318 \cdot 10^{13} \cdot 10^2}{10^3 \cdot 10^2 \cdot 1.5 \cdot 10^5 \cdot 15.2 \cdot 10^6} = \frac{10^{15}}{10^{16}} \cdot 5.27 = \mathit{0.53\ cm}.$$

The settlement of the soft layer, corresponding to the depression of the centre of the beam according to Equation (8) is then

$$\left(0.36 - 0.085 \cdot \frac{0.36}{0.45}\right) \cdot \frac{400}{60} = (0.36 - 0.0680) \cdot 6.67 = \mathit{1.95\ cm}.$$

and the depression at the end of the beam is

$$\left(0.18 + 0.085 \cdot \frac{0.18}{0.45}\right) \cdot \frac{400}{60} = (0.18 + 0.034) \cdot 6.67 = \mathit{1.42\ cm}.$$

IX. Effect of stiffness of the structure.

In order to obtain an idea of the effect of stiffness of the structure, the following considerations will be added to the numerical examples given under VIII. Let it be assumed that the moment of inertia of the stiffening ribs, and therefore their resisting moment, is a) twice as great, and b) half as great as before. Under these assumptions the depth of the beam will therefore remain unaltered.

Case a).

$$\Delta p = \frac{0.18}{0.46 + 1.2} = \frac{0.18}{1.66} = 0.108 \text{ atm} = 1.08 \text{ t/m}^2.$$

Stresses in the ribs

$$M = \frac{1}{20} \cdot 1.08 \cdot 24^2 \cdot 1 = 31.1 \text{ mt}$$

$$\sigma_b = \frac{31.1 \cdot 10^5}{4.74 \cdot 10^5} = 6.56 \text{ kg/cm}^2, \qquad \sigma_e = 131 \text{ kg/cm}^2.$$

The deflection of the container will amount to $f_L = 0.334$ cm.

Case b).

$$\Delta p = \frac{0.18}{1.86 + 1.2} = \frac{0.18}{3.06} = 0.06 \text{ atm} = 0.6 \text{ t/m}^2.$$

Stresses in the ribs

$$M = \frac{1}{20} \cdot 0.6 \cdot 24^2 \cdot 1 = 17.28 \text{ mt}$$

$$\sigma_b = \frac{17.3 \cdot 10^5}{1.19 \cdot 10^5} = 14.5 \text{ kg/cm}^2, \qquad \sigma_e = 290 \text{ kg/cm}^2.$$

The deflection of the container will amount to $f_L = 0.743$ cm.

Stiffness of structure	Δp t/m²	Stresses σ_b in concrete	Stresses σ_e in steel	Deflection of structure
$^1/_2$ J	0.60	14.5 kg/cm²	290 kg/cm²	0.74 cm
J	0.85	10.3 „	206 „	0.53 „
2 J	1.08	6.6 „	131 „	0.33 „

The effect of increasing the stiffness of the beam is to reduce the bending stresses therein, the depth remaining the same.

X. The most effective depth and stiffness for a structure.

Another point of interest is the effect of a varying depth of beam on the magnitude of the stresses. For this purpose we will simply assume a rectangular cross-section of beam as shown in Fig. 10 with $W = {}^1/_6\, tH^2$, $J = {}^1/_{12}\, tH^3 = \frac{H}{2} \cdot W$.

From Equations (5) and (10) we then obtain

Fig. 10.

$$M = \frac{1}{20} \cdot \Delta p \cdot L^2 t$$

$$= \frac{1}{20} \cdot L^2 t \cdot \frac{p_m - p_a}{\frac{\alpha L^4 \cdot t \cdot K}{EJ \cdot h} + \frac{p_m + p_a}{p}}$$

and the bending stress is simply

$$\sigma = \frac{M}{W} = \frac{L^2 \cdot t}{20\,W} \cdot \frac{p_m - p_a}{\frac{\alpha L^4 \cdot t \cdot K}{EJ \cdot h} + \frac{p_m + p_a}{p}}$$

and on simplifying by $p' = p_m - p_a$ and $p'' = \frac{p_m + p_a}{p}$ using the above values for J and W we obtain

$$\sigma = \frac{3\,L^2 \cdot p' \cdot E \cdot h \cdot H}{120\,\alpha \cdot L^4 \cdot K + 10\,p'' \cdot H^3 \cdot E \cdot h}.$$

With the further simplifications

$$\beta = 3\,L^2 \cdot p' \cdot E \cdot h, \quad \gamma = 120\,\alpha \cdot L^4 \cdot K, \quad \delta = 10\,p'' \cdot E \cdot h$$

we obtain

$$\sigma = \frac{\beta \cdot H}{\gamma + \delta \cdot H^3}$$

and the maximum value of bending stress σ is found by putting $\frac{d\sigma}{dH} = 0$ as follows:

$$H = \sqrt[3]{\frac{6\,\alpha \cdot L^4 \cdot K}{p'' \cdot E \cdot H}} \tag{11}$$

It thus appears as a peculiar fact that there exists a least favourable depth of beam H which gives rise to a maximum value of the stress σ. For the numerical example

$$\beta = 3 \cdot 2.4^2 \cdot 10^6 \cdot 0.18 \cdot 1.5 \cdot 10^5 \cdot 4 \cdot 10^2 = 18.65 \cdot 10^{13}\ \mathrm{kg^2\,cm^{-1}}$$

$$\gamma = 1.2 \cdot 10^2 \cdot 4.26 \cdot 10^3 \cdot 2.4^4 \cdot 10^{12} \cdot 6 \cdot 10 = 10.16 \cdot 10^{14}\ \mathrm{kg\,cm^2}$$

$$\delta = 10 \cdot 1.2 \cdot 1.5 \cdot 10^5 \cdot 4 \cdot 10^2 = 7.2 \cdot 10^8\ \mathrm{kg\,cm^{-1}}$$

$$H = \sqrt[3]{\frac{25.56 \cdot 10^{-8} \cdot 33.17 \cdot 10^{12} \cdot 6 \cdot 10}{1.2 \cdot 1.5 \cdot 10^5 \cdot 4 \cdot 10^2}} = \sqrt[3]{706 \cdot 10^3} = 89\ \mathrm{cm} = \mathit{0.9\ m}.$$

$$\sigma = \frac{18.65 \cdot 10^{15} \cdot H}{10.16 \cdot 10^{14} + 7.2 \cdot 10^{14}\,H^3} = \frac{186.5 \cdot H}{10.16 + 7.2\,H^3},$$

when H is inserted in metres.

The calculation for different numerical values of H gives

H =	0.3	0.5	0.7	0.8	*0.9*	1.0	1.1	1.3	1.5 m
σ =	5.51	8.43	10.33	10.75	*10.90*	10.85	10.38	9.32	8.13 kg/cm².

If the depth of the beam is less than the least favourable value H = 0.9 m, then the stresses in the beam will be smaller, because the beam being less rigid possesses less bending resistance, and is able to adapt itself better to depressions in the ground.

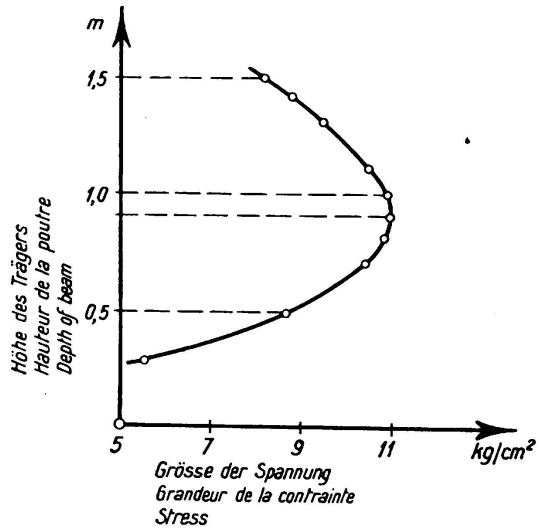

Fig. 11.

If the depth of the beam is in excess of the value H = 0.9 m then, also, the bending stresses in the beam will be smaller, because although the beam is stiffer and can take up a larger share of the load, its resisting moment increases with the square of the depth, and it is thereby enabled to withstand more easily the bending moments from the heavier loading.

There follows from this a most important rule that when building on yielding or compressible ground, either the structure should be so arranged that it can easily follow the deflections (by making the structure loose and arranging it in independent parts separated by gaps etc.) or, on the other hand, the structure should be made so stiff and resistant to bending that it can withstand all the bending stresses. In this instance the middle way is an evil, for it leads to the maximum stresses in the structure.