Zeitschrift: IABSE congress report = Rapport du congrès AIPC = IVBH Kongressbericht

Band: 2 (1936)

Artikel: Limits of equilibrium of earths and loose materials

Autor: Ritter, M.

DOI: https://doi.org/10.5169/seals-3237

Nutzungsbedingungen

Die ETH-Bibliothek ist die Anbieterin der digitalisierten Zeitschriften auf E-Periodica. Sie besitzt keine Urheberrechte an den Zeitschriften und ist nicht verantwortlich für deren Inhalte. Die Rechte liegen in der Regel bei den Herausgebern beziehungsweise den externen Rechteinhabern. Das Veröffentlichen von Bildern in Print- und Online-Publikationen sowie auf Social Media-Kanälen oder Webseiten ist nur mit vorheriger Genehmigung der Rechteinhaber erlaubt. Mehr erfahren

Conditions d'utilisation

L'ETH Library est le fournisseur des revues numérisées. Elle ne détient aucun droit d'auteur sur les revues et n'est pas responsable de leur contenu. En règle générale, les droits sont détenus par les éditeurs ou les détenteurs de droits externes. La reproduction d'images dans des publications imprimées ou en ligne ainsi que sur des canaux de médias sociaux ou des sites web n'est autorisée qu'avec l'accord préalable des détenteurs des droits. En savoir plus

Terms of use

The ETH Library is the provider of the digitised journals. It does not own any copyrights to the journals and is not responsible for their content. The rights usually lie with the publishers or the external rights holders. Publishing images in print and online publications, as well as on social media channels or websites, is only permitted with the prior consent of the rights holders. Find out more

Download PDF: 16.02.2026

ETH-Bibliothek Zürich, E-Periodica, https://www.e-periodica.ch

VIII 4

Limits of Equilibrium of Earths and Loose Materials.

Grenzzustände des Gleichgewichtes in Erd- und Schüttmassen.

Etats limites de l'équilibre dans les masses de terre et de dépôt.

Dr. M. Ritter,
Professor an der Eidg. Technischen Hochschule, Zürich.

In the following report we shall establish the conditions which must be fulfilled by the internal stresses of a noncohesive mass of earth or other loose material when the mass is at the so-called limit of equilibrium. We shall confine our observations to two-dimensional states of stress, on the fundamental assumption that the stresses constantly vary with the place under consideration. Applying the classic law of friction, we find the limit of equilibrium at any point through which a rupture surface passes, i. e. a surface in which the resultant stress q forms the frictional angle ρ with the surface normal.

As early as 1857 *Rankine* analysed the classic state of stressing, now called after him, in the interior of a laterally unlimited mass of earth of even surface, using the hypotheses mentioned. *Winkler, Mohr, Weyrauch, Lévi* and others subsequently elaborated this theory. *Boussinesq* and *Résal*[1] extended *Rankine*'s theory to other surface conditions and attempted to establish the state of stressing behind a retaining wall when the direction of earth pressure deviates from that demanded by *Rankine*'s theory. This problem, particularly in conjunction with *Coulomb*'s theory of earth pressure, eventually led to numerous discussions in technical publications. In 1893 *F. Kötter* published the general differential equation for the pressure in a curved rupture surface[2]. Although quite a number of engineers subsequently treated earth pressure problems under the assumption of curved friction surfaces, the relation has not, as far as we know, been practically applied. In 1924 H. Reissner[3] expressed his views on the problem of earth pressure in an extensive work and discussed the difficulties offered by the analysis of the general limit condition under consideration of the dead weight of the mass of earth. More recently *A. Caquot*[4] has worked out the theory as a whole and

---

[1] *J. Résal:* Poussée des terres (Earth Pressure), Vol. 2, Paris 1903.

[2] *H. Müller-Breslau:* Erddruck auf Stützmauern (Earth Pressure on Retaining Walls), Stuttgart 1906.

[3] *H. Reissner:* Zum Erddruckproblem (The Problem of Earth Pressure). Sitzungsberichte der Berliner Mathematischen Gesellschaft, 1924.

[4] *A. Caquot:* Equilibre des massifs à frottement interne (Equilibrium of solid bodies with internal friction), Paris 1934.

applied it in solving a number of practical problems. Apart from its importance in calculating retaining walls, its principal use lies in determining the carrying capacity of foundation strips at the limit of equilibrium — a problem to which *Rankine* had already tried to find a solution. Now that light has been thrown by *K. Terzaghi*[5] on the principle of cohesion for masses of earth or loose material, calculation can also be extended in certain cases to include cohesive soil as well. Thus, Caquot elaborates the formula for the carrying capacity of a foundation strip to cover soil with so-called apparent cohesion.

1. Principles.

On the assumption that the stresses in a mass of soil vary from point to point, the angle ρ', formed by the stress q' of any surface element forms with its normal, is a continuous function of the angle φ of the surface element in respect to a fixed direction. The angle ρ' attains its highest value ρ in the rupture surfaces; thus the latter are defined by the fundamental relation

$$\frac{d\rho'}{d\varphi} = 0. \tag{1}$$

In conjunction with the conditions necessary for equilibrium, this relation suffices to determine both the relative position of the rupture surfaces in respect to the main stresses, and the main stress ratio that must be present in a limiting state of equilibrium.

If σ_1 and σ_2 denote the main stresses, the conditions necessary for equilibrium in an infinitely small prism of earth having a length = 1 (see Fig. 1), then

$$q \sin \rho' = (\sigma_1 - \sigma_2) \sin \varphi \cos \varphi$$
$$q \cos \rho' = \sigma_1 \cos^2 \varphi + \sigma \sin^2 \varphi,$$

hence

$$\operatorname{tg} \rho' = \frac{(\sigma_1 - \sigma_2) \operatorname{tg} \varphi}{\sigma_1 + \sigma_2 \operatorname{tg}^2 \varphi}. \tag{2}$$

Fig. 1.

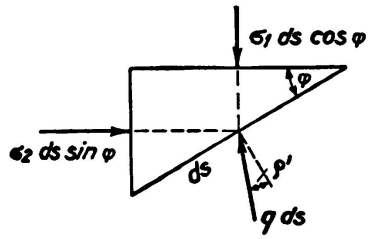

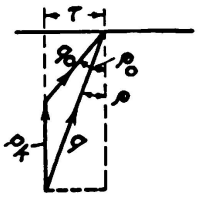

Fig. 2.

The maximum $\rho' = \rho$ is created in accordance with Eq. 1 for

$$\frac{d\rho'}{d\varphi} = \frac{d \operatorname{tg} \rho'}{d \operatorname{tg} \varphi} = \frac{(\sigma_1 - \sigma_2)(\sigma_1 - \sigma_2 \operatorname{tg}^2 \varphi)}{(\sigma_1 + \sigma_2 \operatorname{tg}^2 \varphi)^2} = o; \tag{3}$$

which first of all gives

$$\sigma_1 = \sigma_2 \operatorname{tg}^2 \varphi \tag{3a}$$

and Eq. 2 yields for the rupture surfaces

$$\operatorname{tg} \rho = -\operatorname{cotg} 2\varphi.$$

[5] *K. Terzaghi:* Erdbaumechanik (Soil Mechanics), Vienna 1925.

Thus we have $\varphi = 45^\circ + \frac{\sigma}{2}$; the rupture surfaces form with the surface on which σ_1 acts, the angles $\pm\ (45^\circ + \frac{\sigma}{2})$, which means that they intersect below the angle $90^\circ - \rho$.

The ratio (3a) is therefore transformed into

$$\sigma_2 = \sigma_1 \operatorname{tg}^2 \left(45^0 - \frac{\rho}{2}\right); \tag{4}$$

this relation between the two main tensions must be present at every point belonging to a friction surface, i. e. to every point at the limit of equilibrium. The pressure q at the friction surface can readily be expressed in terms of σ_1 or σ_2, and amounts to

$$q = \sigma_1 \operatorname{tg} \left(45^0 - \frac{\rho}{2}\right). \tag{5}$$

The relations we have established may easily be extended to *cohesive soil*, on the assumption that apparent cohesion, as so designated by *Terzaghi*, is present. This is created by the pressure of capillary water, which compacts the material and subjects it to a state of spatial stressing having the universal compressive stresses p_k which exceed the other stresses. The angle of friction ρ remains as long as the state of stressing is considered to include the compressive stresses p_k. The law of friction now becomes

$$\tau = (\sigma + p_k) \operatorname{tg} \rho = p_k \operatorname{tg} \rho + \sigma \operatorname{tg} \rho. \tag{6}$$

Even Coulomb had calculated in principle with this law, introducing a coefficient of cohesion and writing the law of friction as $\tau = c + \sigma \operatorname{tg} \rho$.

As the compressive stresses p_k are self-stresses and maintain equilibrium in some part of the mass of soil, it is necessary, when the stresses σ_1, σ_2 and q are brought into relation with external forces, to exclude the stresses p_k. Eq. 4 therefore becomes the following for cohesive materials:

$$\sigma_2 + p_k = (\sigma_1 + p_k) \operatorname{tg}^2 \left(45^0 - \frac{\rho}{2}\right),$$

hence

$$\sigma_2 = \sigma_1 \operatorname{tg}^2 \left(45^0 - \frac{\rho}{2}\right) - p_k \left[1 - \operatorname{tg}^2 \left(45^0 - \frac{\rho}{2}\right)\right]. \tag{7}$$

After deduction of the normal stressing p_k, the compression q at the rupture surface becomes (Fig. 2)

$$q_0 = q \frac{\sin \rho}{\sin \rho_0}, \quad \text{where} \quad \operatorname{tg} \rho_0 = \frac{\operatorname{tg} \rho}{1 - \frac{p_k}{q \cos \rho}}. \tag{8}$$

At the rupture surface there thus arises an apparent (greater) angle of friction ρ_0, while the angle $45^\circ + \frac{\sigma}{2}$ between rupture surface and main stressing is maintained.

The easiest way of assessing the practically possible values of p_k is by considering the vertical walls of excavations, which, as is well known, often hold without shoring to a considerable height h. At the surface of such a wall $\sigma_1 = \gamma h$ and $\sigma_2 = 0$, hence according to Eq. 7 the material must be subject to a capillary compressive stress of

$$p_k = \gamma h \frac{1}{tg^2\left(45^0 + \frac{\rho}{2}\right) - 1} \tag{9}$$

Compressive stresses p_k of from 0.3 to 0.5 kg/cm² are frequently to be observed in gravel sand containing clay.

2. Compressive stresses at the rupture surface.

We shall now proceed to establish *F. Kotter*'s equation for compressive stressing at a curved rupture surface in a particularly simple form especially intended for engineers[1]. We shall consider an infinitely small prism of earth lying at a curved rupture surface AC at a distance s from the surface C (cf. Fig. 3). Let the prism have a length = 1 vertically to the plane of the figure, and let the one surface $1 - 2 = ds \cdot 1$ lie in the rupture surface, the other surface 2 — 3 being turned an angle of $d\varphi$. On the surface 1 — 2 acts the compressive stress q ds at the angle of friction ρ, on surface 2 — 3 the compressive stress q′ ds, also at the angle of friction ρ (cf. Eq. 1). The condition necessary for equilibrium as regards turning around the axis o in the surface 1 — 3 is

$$q\, ds \cdot \frac{ds}{2} \cos(\rho - d\varphi) = q'\, ds \cdot \frac{ds}{2} \cos(\rho + d\varphi);$$

from which we get

$$q' = q \frac{\cos(\rho - d\varphi)}{\cos(\rho + d\varphi)} = q \frac{\cos\rho \cos d\varphi + \sin\rho \sin d\varphi}{\cos\rho \cos d\varphi - \sin\rho \sin d\varphi}$$

or when $\cos d\varphi = 1$ and $\sin d\varphi = d\varphi$

$$q' = q\,(1 + 2\, tg\,\rho \cdot d\varphi). \tag{10}$$

The dead weight of the earth prism creates an infinitely small moment of a higher order and therefore does not come under consideration. We now add to the surface 1 — 3 the congruent prism 1 — 3 — 4 having its 1 — 4 surface in the rupture surface. Now the compressive stress (q + dq) ds acts on the 1 — 4 surface at the angle of friction ρ, the compressive stress q″ ds on the surface 3 — 4 also — in accordance with Eq. 1 — at the angle of friction ρ. The prism 1 — 2 — 3 — 4 has a dead weight of $\gamma\, ds^2\, d\varphi \cdot 1$, wherein γ denotes the specific weight of the earth. We can readily eliminate q″ by introducing the condition necessary for maintaining equilibrium against displacement in the direction of the axis a — a perpendicular to the stress q″. This condition is

$$(q + dq)\, ds\, d\varphi - q\,(1 + 2\, tg\,\rho\, d\varphi)\, ds\, d\varphi = \gamma \sin(\varphi - \rho)\, ds^2\, d\varphi$$

[6] *M. Ritter:* The theory of earth pressure on retaining walls. Schweizerische Bauzeitung 1910. These elucidations were confined to non-cohesive material.

and yields *F. Kötter*'s differential equation

$$\frac{dq}{ds} - 2\,q\,\mathrm{tg}\,\rho \cdot \frac{d\varphi}{ds} = \gamma \sin(\varphi - \rho). \tag{11}$$

Integration gives us

$$q = \gamma\, e^{2\varphi\,\mathrm{tg}\,\varphi} \int_0^s e^{-2\varphi\,\mathrm{tg}\,\rho} \sin(\varphi - \rho)\, ds + q_a,$$

in which C denotes the compressive stress at the point C. If the rupture surface is plane, $d\varphi/ds$ disappears and we get

$$q = \gamma\, s \sin(\varphi - \rho) + q_a. \tag{12}$$

In the case of a cohesive material q_o and ρ_o can be calculated from q and ρ with the aid of Eq. 8; here it should be noted that ρ_o varies along the rupture surface as the relation p_k/q changes. This fact makes the application of the equation more difficult.

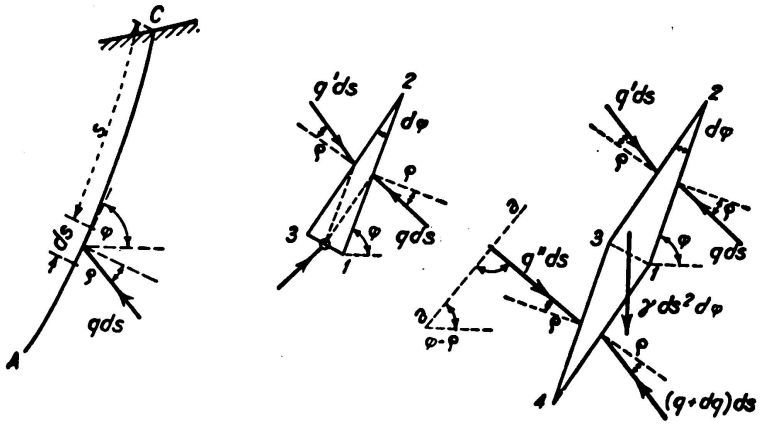

Fig. 3.

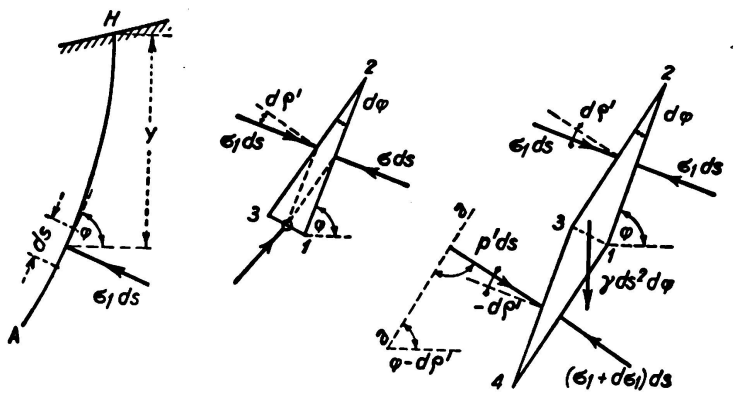

Fig. 4.

2. The principal stresses.

For the principal stressing σ_1 or σ_2 a relation can be established, in the same manner as for the compressive stress q at the rupture surface, permitting the ready calculation of σ_1 and σ_2 at any depth below the surface. A H in Fig. 4 is a principal stress surface whose tangents may take the direction of

the principal stress σ_2. Let us consider the infinitely small prism of earth $1 - 2 - 3$, having a length $= 1$ and one surface of which, $1 - 2 = ds \cdot 1$, lies in the principal surface A H and forms the angle $d\varphi$ with the surface $2 - 3$. On the surface $1 - 2$ acts the principal stress σ_1, on the surface $2 - 3$ the stress p, which is only distinguished from σ_1 by an infinitely small magnitude of the second order. The principal stresses, as is known, being maximum values, on the principal surface we have $d\sigma/d\varphi = 0$. It should be noted that p does not act normally to the surface $2 - 3$, but at an angle $d\rho'$, which can easily be calculated. From Eq. 12, for a prism of earth with an angle φ of any size, we get

$$\frac{d\rho'}{d\varphi} = \frac{(\sigma_1 - \sigma_2)(\sigma_1 - \sigma_2 \operatorname{tg}^2 \varphi)}{(\sigma_1 + \sigma_2 \operatorname{tg}^2 \varphi)^2};$$

by turning the surface ds. 1 in the principal plane, i. e. by making $\varphi = 0$, the following is obtained:

$$\left(\frac{d\rho'}{d\varphi}\right)_{\varphi=0} = 1 - \frac{\sigma_2}{\sigma_1} = 1 - \operatorname{tg}^2\left(45^0 - \frac{\rho}{2}\right). \tag{13}$$

To the surface $1 - 3$ we now add the congruent prism $1 - 3 - 4$, whose surface $1 - 4$ lies in the principal surface A H and is subjected to the main stressing $\sigma_1 + d\sigma_1$, while the compressive stress $p' ds$ acts on the surface $3 - 4$ at an angle of $-d\rho'$ (it is easy to realise that $d^2\rho'/d\varphi^2$ disappears when $\varphi = 0$). The dead weight of the prism $1 - 2 - 3 - 4$ is $\gamma\, ds^2 d\varphi \cdot 1$. The condition necessary to prevent displacement in the direction of the axis a — a, inclined at an angle of $\varphi - d\rho'$ and perpendicular to p', is expressed:

$$(\sigma_1 + d\sigma_1)\, ds\, (d\varphi - d\rho') - \sigma_1\, ds\, d\rho' - \sigma_1\, ds\, (d\varphi - 2\, d\rho') = \gamma\, ds^2\, d\varphi \sin(\varphi - d\phi;)$$

from which is obtained:

$$\frac{d\sigma_1}{ds} = \frac{\gamma \sin\varphi}{1 - \frac{d\rho'}{d\varphi}} = \gamma \operatorname{tg}^2\left(45^0 + \frac{\rho}{2}\right) \sin\varphi. \tag{14}$$

The integration, beginning from the surface, yields

$$\sigma_1 = \gamma \operatorname{tg}^2\left(45^0 + \frac{\rho}{2}\right) \cdot \int_0^s \sin\varphi\, ds = \gamma \operatorname{tg}^2\left(45^0 + \frac{\rho}{2}\right) \cdot y + \sigma_{a1}, \tag{15}$$

in which σ_{a1} denotes the main stressing σ_1 (caused by surcharge) at the surface. Eq. 15 implies that the main stress σ_1 set up at the depth y by the weight γ, corresponds to the compressive stress of a liquid of $\gamma \operatorname{tg}^2\left(45^0 + \frac{\rho}{2}\right)$ specific weight.

In corresponding manner it is possible to calculate the main stress σ_2. The condition necessary for equilibrium in the infinitely small prism of earth is in this case

$$\frac{d\sigma_2}{ds} = \frac{\gamma \sin\varphi}{1 + \frac{d\rho'}{d\varphi}};$$

in which we have to introduce

$$\left(\frac{d\rho'}{d\varphi}\right)_{\varphi=90^0} = tg^2\left(45^0 + \frac{\rho}{2}\right) - 1$$

By integration we obtain

$$\sigma_2 = \gamma\, tg^2\left(45^0 - \frac{\rho}{2}\right) \cdot y + \sigma_{a2}, \tag{16}$$

σ_{a2} representing the main stress σ_2 at the surface.

For cohesive soil Eq. 15 is written

$$\sigma_1 + p_k = \gamma\, tg^2\left(45^0 + \frac{\rho}{2}\right) \cdot y + (\sigma_{a1} + p_k).$$

Eq. 15 and also Eq. 16 thus remain in the sense that the compressive stresses p_k vanish. The influence of cohesion is expressed in the alteration of σ_{a1} in accordance with Eq. 7.

4. Carrying capacity of the foundation strip.

The relations developed in Pars. 2 and 3 permit the calculation of the greatest possible loading of a foundation strip, compatible with equilibrium. The loading in this case is that which, when rupture surfaces form, causes the soil to be laterally displaced and the foundation block to subside. Let us assume that the foundation lies at a depth h below the surface, that its width is 2b and its length such that the problem can be treated as a two-dimensional stress problem. Fig. 5 shows roughly the approximate character of the state of

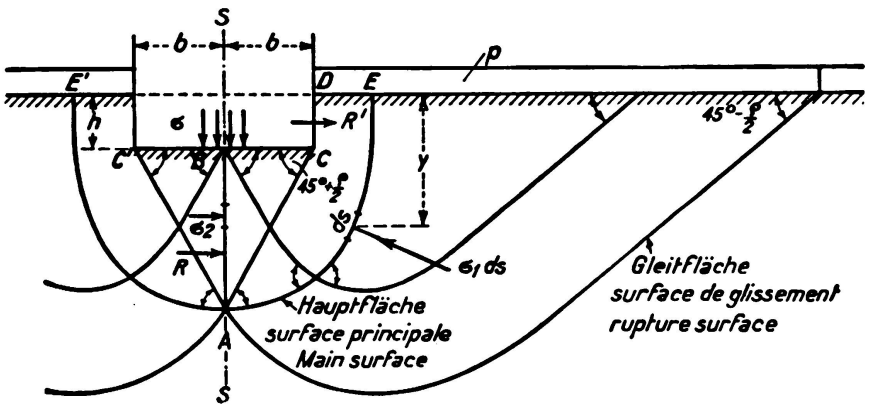

Fig. 5.

stressing at the limit of equilibrium. The specific compressive stress of the foundation we shall designate with σ, and we shall assume that outside the foundation there also acts a surface stress p.

For reasons of symmetry the plane s — s is a principal surface in the sense of Par. 3, so that in accordance with Eq. 16 the horizontal principal stress

$$\sigma_2 = \gamma\, tg^2\left(45^0 - \frac{\rho}{2}\right) \cdot y + \sigma\, tg^2\left(45^0 - \frac{\rho}{2}\right). \tag{17}$$

acts at the depth y. The rupture surfaces must form the angle $45^0 - \frac{\sigma}{2}$ with the principal surface s — s, and the angle $45^0 + \frac{\sigma}{2}$ with foundation slab.

Below the foundation, therefore, within the form CAC′, there prevails the classic Rankine state of stressing with plane rupture surfaces, and

$$z = b \operatorname{tg}\left(45^0 + \frac{\rho}{2}\right). \tag{18}$$

Outside the rupture surfaces A C and A C′ the system of stresses is more complicated; as seen in Fig. 5, curved rupture surfaces are created, a group of them cutting the free surface at an angle of $45^\circ - \frac{\rho}{2}$, since the surface on which p acts represents a principal surface. The principal surface of the stresses σ_1, which passes through A, cuts this group of rupture surfaces at an angle of $45^\circ + \frac{\rho}{2}$, thus forming in section with the plane of the figure the curve E A E′ which, for reasons of symmetry, possesses a horizontal tangent at A and cuts the free surface vertically at E and E′.

Although the form of the principal surface E A E′ is not quite definite, it is easy to calculate the principal stressing σ_1 from Eq. 15, for σ_1 does not depend on the form of the surface, but soleley on the depth y. According to Eq. 4, at the surface we get the relation

$$p = \sigma_{a1} \operatorname{tg}^2\left(45^0 - \frac{\rho}{2}\right),$$

from which it is necessary to withdraw σ_{a1} and introduce it into Eq. 15. Accordingly, at the depth y

$$\sigma_1 = \gamma \operatorname{tg}^2\left(45^0 + \frac{\rho}{2}\right) \cdot y + p \operatorname{tg}^2\left(45^0 + \frac{\rho}{2}\right). \tag{19}$$

We analyse the compressive stress $\sigma_1 \, ds \cdot 1$ into its horizontal components $\sigma_1 \, ds \sin\varphi = \sigma_1 \, dy$ and its vertical components $\sigma_1 \, ds \cos\varphi$. The condition for equilibrium in the body of earth A B C D E necessary to prevent horizontal displacement then yields the foundation pressure σ at the limit of equilibrium.

This condition is

$$R + R' = \int_0^{h+z} \sigma_1 \, dy. \tag{20}$$

The resultant R in the surface A B ensues from Eq. 17 by integration —

$$R = \frac{1}{2} \gamma z^2 \operatorname{tg}^2\left(45^0 - \frac{\rho}{2}\right) + \sigma z \operatorname{tg}^2\left(45^0 - \frac{\rho}{2}\right).$$

To obtain the resultant R′, however, Eq. 18 has to be used, giving us

$$R' = \frac{1}{2} \gamma h^2 \operatorname{tg}^2\left(45^0 + \frac{\rho}{2}\right) + p h \operatorname{tg}^2\left(45^0 + \frac{\rho}{2}\right).$$

The sum of the horizontal forces at the curved main surface A E is

$$\int_0^{h+z} \sigma_1 \, dy = \int_0^{h+z} \gamma \operatorname{tg}^2\left(45^0 + \frac{\rho}{2}\right) y \, dy + \int_0^{h+z} p \operatorname{tg}^2\left(45^0 + \frac{\rho}{2}\right) dy$$

$$= \frac{1}{2} \gamma (h + z)^2 \operatorname{tg}^2\left(45^0 + \frac{\rho}{2}\right) + p (h + z) \operatorname{tg}^2\left(45^0 + \frac{\rho}{2}\right).$$

If these expressions are introduced into Eq. 20 and z is expressed, in accordance with Eq. 18, in terms of b, we obtain the foundation pressure σ at the limit of equilibrium, namely,

$$\sigma = \frac{1}{2}\gamma b\left[\mathrm{tg}^5\left(45^0 + \frac{\rho}{2}\right) - \mathrm{tg}\left(45^0 + \frac{\rho}{2}\right)\right] + (\gamma h + p)\,\mathrm{tg}^4\left(45^0 + \frac{\rho}{2}\right). \quad (21)$$

The first summation represents the carrying capacity when the foundation is placed directly on a free surface. The second term, which expresses the influence of the depth of the foundation when the surface is subjected to loading, has already been deducted by Rankine himself and is to be found in most manuals. For soil with cohesive properties $\sigma' + p_k$ must be inserted in Eq. 21 instead of σ, and $p + p_k$ instead of p. This yields the increased foundation pressure σ' at the limit of equilibrium

$$\sigma' = \sigma \mp p_k\left[\mathrm{tg}^4\left(45^0 + \frac{\rho}{2}\right) - 1\right]. \quad (22)$$

The employment of the principal surfaces in calculating the carrying capacity σ and σ' respectively offers the advantage that the form of the principal surfaces outside the zone A C C′ need not be exactly known. Besides which one can also try to use the rupture surface A F passing through A to determine the stressing. *A. Prandtl, H. Reissner* and *A. Caquot* (l. c.) for h = 0 and disregarding the weight γ, deduced that

$$\sigma = p\,\mathrm{tg}^2\left(45^0 + \frac{\rho}{2}\right)\cdot e^{\pi\,\mathrm{tg}\,\rho} \quad (23)$$

which for cohesive soil (by writing $\sigma' + p_k$ instead of σ and $p + p_k$ instead of p) becomes

$$\sigma' = \sigma + p_k\left[\mathrm{tg}^2\left(45^0 + \frac{\rho}{2}\right) e^{\pi\,\mathrm{tg}\,\rho} - 1\right]. \quad (24)$$

These relations were arrived at by taking as a basis the state of stressing sketched in Fig. 6, for which the condition of a continuous form of the stresses is fulfilled. In the regions A C C′ and C F G Rankine's states of stressing, with plane surfaces, are assumed, while in the zone A C F continuous transition is obtained by using the *Résal* state of stressing, in which one set of rupture lines is represented by a group of rays, and the other (which crosses it at an angle of $90^\circ - \rho$), by logarithmic spirals. It is then easy to recognise that the compressive stresses, at the rupture surface A G pass through the point C, and that the angle A C G is a right angle. The moment equation for the point C of the earth body A B C J G then gives us directly the relations 23 and 24. However, the author finds this basis of calculation, which leads to very much higher limit loads than Eq. 21, extremely unsure. For, firstly, it is by no means proved that the state of stressing shown in Fig. 6 (in itself possible and not contradictory) correspond to the minimum values of σ and σ' respectively. Furthermore, it is not possible to extend the calculation in order to take the dead weight γ of the soil into account, since the equilibrium of forces at the element C M N is upset if the compressive stresses at the surfaces C M and C N are determined according to Eq. 12 and the dead weight is taken into account in the calculation.

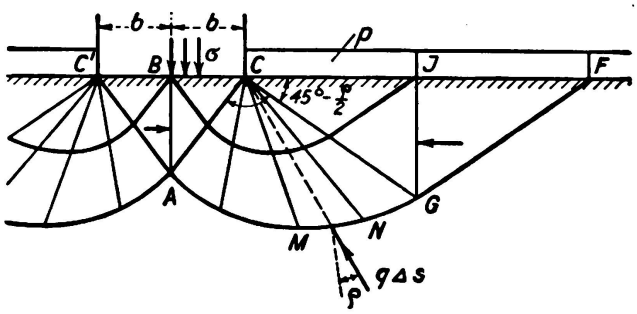

Fig. 6.

5. Earth pressure on retaining walls.

The general relations given in sections 2 and 3, permit the calculation of the earth pressure E acting at any angle, i. e. at the angle of incidence ρ' ($\rho' < \rho$) as given by Coulomb, on the face A B of a retaining wall (cf. Fig. 7). The

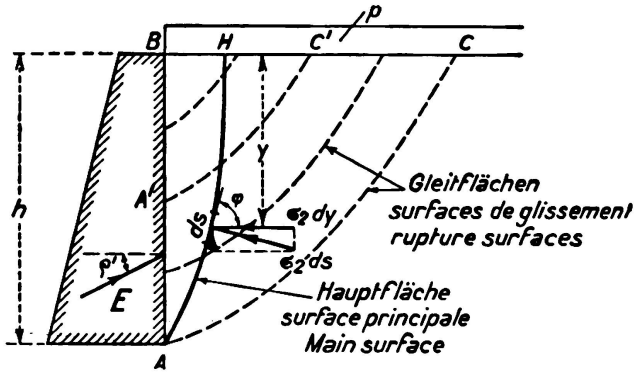

Fig. 7.

hypothesis of plane rupture surfaces, for an arbitrary arrangement, of the direction of E, leads of course to contradictions in the equilibrium of forces in the slipping earth prism, for which reason *H. Müller-Breslau, H. Reissner* (l. c.) and others found it necessary to calculate with curved rupture surfaces. The main problem — the ascertaining of the form of the rupture surfaces requiring the greatest earth pressure E to ensure equilibrium — has not been solved up to the present time.

In the following we shall confine our attention to horizontal ground and vertical retaining wall. The rupture surfaces A C, A′ C′, of unknown shape, are cut at an angle of $(45^\circ - \frac{\rho}{2})$ by the main surface A H, which is acted upon by the main stresses σ_2, calculable from Eq. 16. Thus at a depth of y we have

$$\sigma_2 = \gamma \operatorname{tg}^2\left(45^0 - \frac{\rho}{2}\right) \cdot y + p \operatorname{tg}^2\left(45^0 - \frac{\rho}{2}\right),$$

in which p is an evenly distributed surcharge. We analyse σ_2 ds into its horizontal component $\sigma_2 \, ds \sin\varphi = \sigma_2 \, dy$ and its vertical component $\sigma_2 \, ds \cos\varphi$. The equilibrium of forces against displacement of the earth body A B H in a horizontal direction gives us

$$E \cos\rho' = \int_A^H \sigma_2 \, dy = \gamma \operatorname{tg}^2\left(45^0 - \frac{\rho}{2}\right) \cdot \int_0^h y \, dy + p \operatorname{tg}^2\left(45^0 - \frac{\rho}{2}\right) \cdot \int_0^h dy,$$

whence
$$E = \left(\frac{1}{2}\gamma h^2 + p\,h\right)\frac{tg^2\left(45^0 - \frac{\rho}{2}\right)}{\cos\rho'}. \tag{25}$$

With this formula, which is based on the curved form of rupture surfaces, we can obtain perceptibly higher earth pressures than with Coulomb's earth pressure formula, which assumes plane rupture surfaces.

If the question is one of cohesive soil, $p + p_k$ should be written in Eq. 25 instead of p, and p_k h introduced for $E' \cos\rho'$. From this is obtained

$$E' = E - p_k\,h\,\frac{1 - tg^2\left(45^0 - \frac{\rho}{2}\right)}{\cos\rho'} \tag{26}$$

The relations 25 and 26 are based on the assumption that the limit of equilibrium has been reached in all points of earth body A B C. Whether this state creates the greatest earth pressure, or whether the case in which only one rupture surface is formed is more unfavourable, cannot be determined by the author.

Summary.

For the limit of equilibrium in which every point of the earth body belongs to a (curved) rupture surface, the differential equations for compressive stress at the rupture surface and at the main surface (main stresses) are deduced and integrated. These equations, established for non-cohesive and cohesive soil, are applied in the calculation of the carrying capacity of a strip of foundation, and in the establishment of the earth pressure on a retaining wall, assuming curved rupture surfaces.

Leere Seite
Blank page
Page vide