Zeitschrift: IABSE congress report = Rapport du congrès AIPC = IVBH Kongressbericht

Band: 2 (1936)

Artikel: Girders with rhombic arrangement of members

Autor: Krabbe, Fr.

DOI: https://doi.org/10.5169/seals-3211

Nutzungsbedingungen

Die ETH-Bibliothek ist die Anbieterin der digitalisierten Zeitschriften auf E-Periodica. Sie besitzt keine Urheberrechte an den Zeitschriften und ist nicht verantwortlich für deren Inhalte. Die Rechte liegen in der Regel bei den Herausgebern beziehungsweise den externen Rechteinhabern. Das Veröffentlichen von Bildern in Print- und Online-Publikationen sowie auf Social Media-Kanälen oder Webseiten ist nur mit vorheriger Genehmigung der Rechteinhaber erlaubt. Mehr erfahren

Conditions d'utilisation

L'ETH Library est le fournisseur des revues numérisées. Elle ne détient aucun droit d'auteur sur les revues et n'est pas responsable de leur contenu. En règle générale, les droits sont détenus par les éditeurs ou les détenteurs de droits externes. La reproduction d'images dans des publications imprimées ou en ligne ainsi que sur des canaux de médias sociaux ou des sites web n'est autorisée qu'avec l'accord préalable des détenteurs des droits. En savoir plus

Terms of use

The ETH Library is the provider of the digitised journals. It does not own any copyrights to the journals and is not responsible for their content. The rights usually lie with the publishers or the external rights holders. Publishing images in print and online publications, as well as on social media channels or websites, is only permitted with the prior consent of the rights holders. Find out more

Download PDF: 12.01.2026

ETH-Bibliothek Zürich, E-Periodica, https://www.e-periodica.ch

V 10

Girders with Rhombic Arrangement of Members.

Genaue Berechnung des Rautenträgers.

Calcul exact de la poutre en treillis rhomboïdal.

Dr. Ing. Fr. Krabbe,
Reichsbahnoberrat, Reichsbahnzentralamt München.

I. Special properties of the Rhombic Lattice Girder.

In former decades the rhombic lattice girder, probably on account of its pleasing appearance, was used quite a good deal; one of the largest structures built with it is the Weichsel Bridge near Dirschau. Calculation was based mainly on the method of Prof. *Mehrtens,* Dresden, which divides this system of girders into two partial systems representing simple strut frames. Subsequent exact investigations — and particularly those carried out by *Muller*-Breslau, by the kinematic method — showed, however, that the rhombic lattice girder, considered as a lattice system with frictionless hinges at the panel points, reveals influence lines of very different formation from those given by *Mehrtens'* system of calculation, mentioned above. This is especially so with regard to the diagonals. The influence lines are zig-zag in form, alternating between positive and negative from panel point to panel point. Fig. 1a depicts the form of one of these influence lines as determined by the *Mehrtens* method, Fig. 1b the form according to the kinematic method. The latter form is undoubtedly the correct one, *assuming frictionless hinges in the panel points* on the usual theory of lattice girders. A zig-zag formation exists also for the deflection curves of the girder, as found by means of the kinematic method for a single load (Fig. 2a). These forms of influence and deflection lines, which are doubtlessly unfavourable, were the reason why, as time went on, the rhombic lattice system was used less and less in main bridge girders.

However, the influence line shown in Fig. 1b gives rise to serious objections on closer examination, i. e. when it is remembered that influence lines are deflection lines — the deflection lines of the loaded boom, obtained by lengthening the bar in question by "one". It is obvious that when such deformations occur in a continuous through boom considerable transverse forces are bound to appear, and these may exert a great influence on the form of the deflection line. However, they are not considered in the calculation. It was on these considerations that, when the superstructure of the railway bridge over the Rhine near Wesel[1] was to be renewed in 1926/27, the objections raised to rhombic

[1] Die Bautechnik 1927, H. 46/47.

lattice girders were discounted and the system was chosen for the main girder, and the rhombic lattice girder, shunned for so long a time, again came into its own. On completion of the structure the calculated deflection line shown in Fig. 2a was checked in practice by stressing the girder with a concentrated load

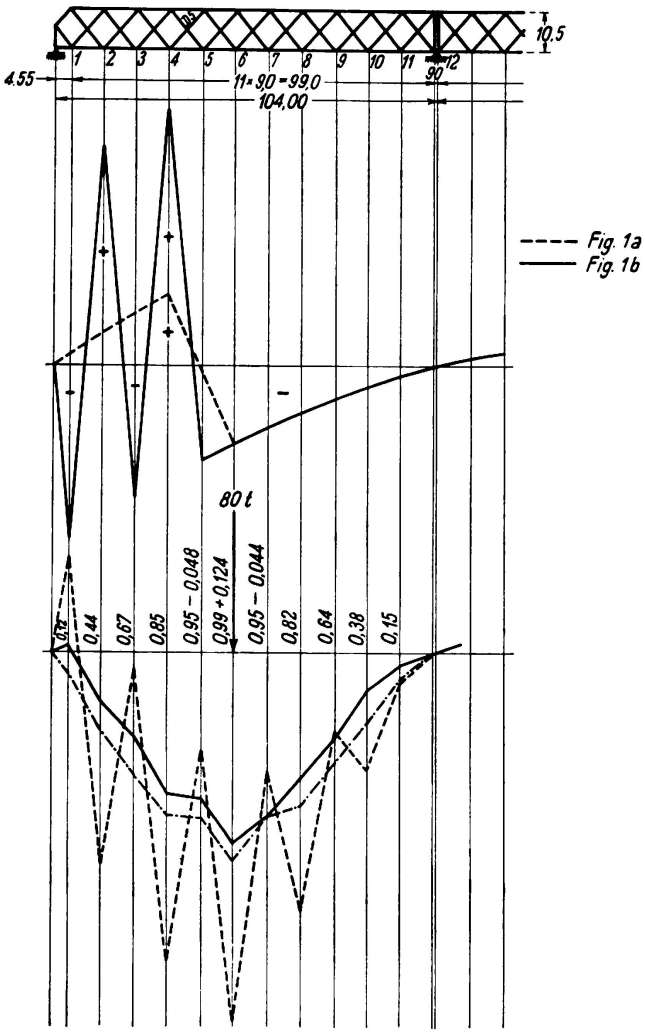

------ Fig. 2a { berechnet mit reibungslosen Gelenken / calculée avec articulations dénuées de frottement / calculated for frictionless panel points

—— Fig. 2b gemessen / mesurée / measured

-·-·-·- Fig. 2c { berechnet mit steifen Gurtungen / calculée avec membrures rigides / calculated for stiff panel points

Die eingetragenen Ordinaten gelten für Fig. 2c
Les ordonnées ici portées se rapportent à la Fig. 2c
The ordinates plotted are for Fig. 2c

Fig. 1—2.

of 80 tons; accurate measurements yielded the real bending line, shown in Fig. 2b. This led to the obvious conclusion that also the deflection line of the loaded boom as obtained by lengthening a strut is in reality of quite a different form from that shown in Fig. 1b. This was subsequently confirmed by meticulous calculations carried out by Dr. *Christiani* to obtain the influence lines of a small

rhombic lattice girder (Fig. 3) which in this case was treated as a 72-times statically indeterminate system, the stiffness of the booms and web members being taken into consideration[2]. Pursuing his investigations, *Christiani* further ascertained that the influence of the stiffness of booms and web members is so great in the case of rhombic lattice girders that the so-called stability bar

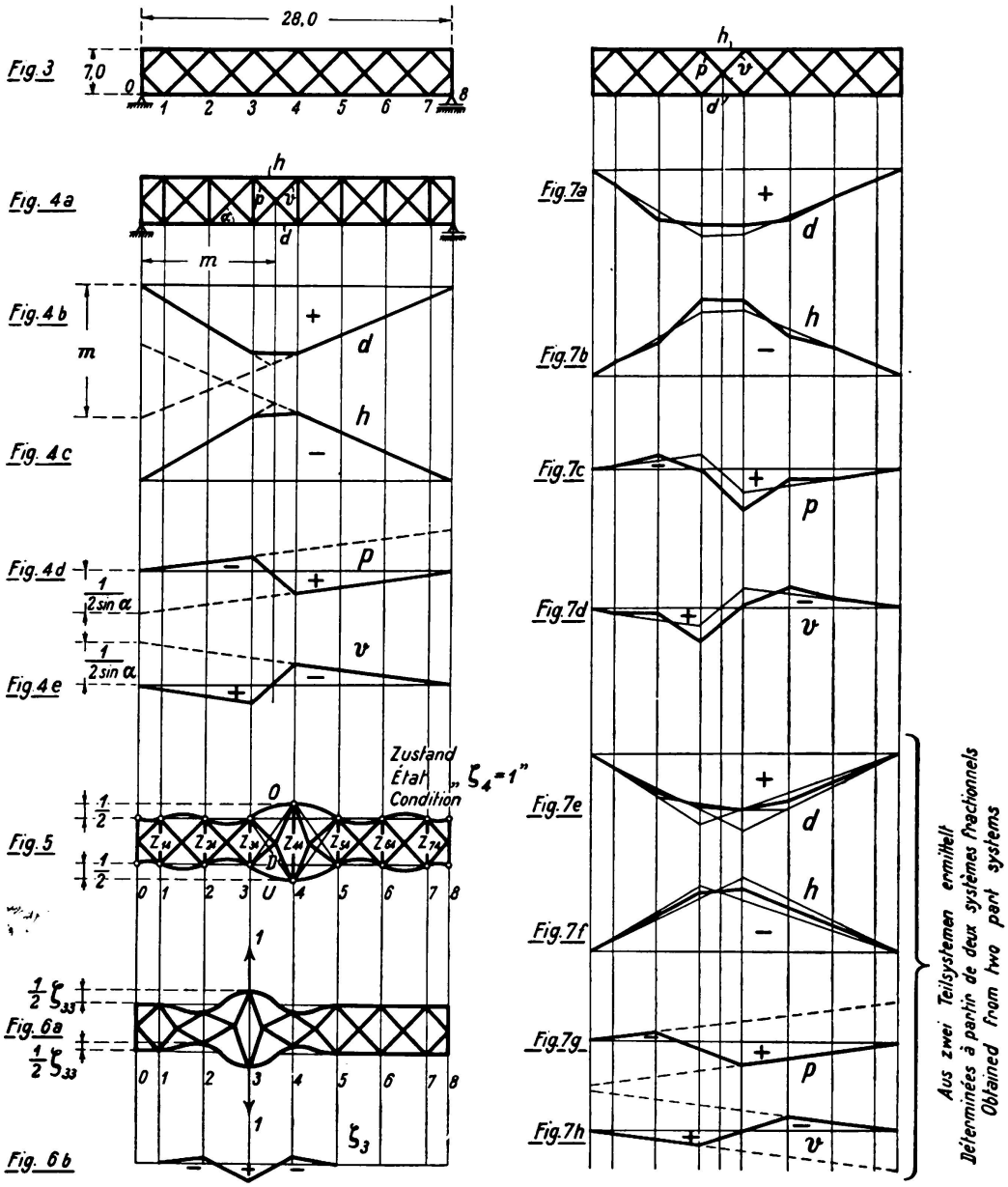

Fig. 3—7.

theoretically necessary to stabilise a lattice system hinged at the panel points, is in general not essential for the stability of the system in reality, and further, that this stability bar is only able to exert any influence at all on the fields in its immediate proximity[3].

[2] *Christiani:* Strenge Untersuchung an Rhomben-Fachwerken (Strict investigation on rhombic lattice girders). Berlin 1929, Jul. Springer.

[3] *Christiani:* Über die angebliche Labilität von Fachwerken (The alleged Lability of lattice systems). „Der Stahlbau" 1931, H. 2.

The considerations, measurements and exact statical investigations here cited plainly indicate that the rhombic lattice girder is not really a lattice system in the ordinary sense of the word, but that, in fact, it must be eliminated from the ranks of lattice systems proper owing to the peculiarities of its influence and deflection lines as calculated according to the theory of lattice systems; that it is a system which can only be calculated with any approach to reality if rigidity at the panel points is taken into consideration. This circumstance also prompted the necessity of working out exact calculations for the Rhine bridge near Wesel, although the structure had meanwhile been completed. However, this was only possible if a more simple method was found than that employed by *Christiani*, for the system of the Rhine bridge at Wesel is 208-times statically indeterminate if the rigidity of all the web members and rigid joints is taken into consideration, and even if the stiffness of the struts and their joints is neglected, it is 57-times statically indeterminate. It is obvious without further comment that the calculation of systems with such high degrees of statical indetermination is practically impossible with the method usually employed.

II. Striking Influence of Rigidity of Boom in Rhombic Lattice Girders.

In my article "Das Wesen des Rautenträgers und seine einfache richtige Berechnung" (The nature of the rhombic lattice girder and a simple, correct method of calculating it)[4], I confined my considerations to the influence of the boom rigidity of the rhombic lattice system, assuming the struts to be hinged to the continuous through booms and neglecting the influence of rigid riveting of the struts at their points of intersection.

In this paper I shall confine myself to summarising the results of these investigations. In order to be able to make comparisons, I also submitted the rhombic lattice girder treated by *Christiani* as a 72-times statically indeterminate system to my investigations, based on the slope deflection method. The main system was formed by the insertion in each rhomboid of a rigid, vertical bar, hinged at the panel points (Fig. 4a). On the basis of simple kinematic considerations its lines of influence gave the forms shown in Fig. 4b—e. Then each of these rigid bars was lengthened successively by one to give the conditions $\zeta_m = 1$, in consequence of which definite bar stresses O, U and D are set up in the two adjacent fields (Fig. 5), besides which all the rigid bars are stressed with forces Z. On nullifying the individual stressing of these rigid supplementary bars, but for loading of the system as in Fig. 6a, we receive the deformations of the girder (for this loading and after removal of the rigid members, i. e. the lengthening of these members ζ_m) which determine the zero state of loading of the individual supplementary members.

Complete calculation of a number of examples showed that in all cases occurring in practice a loading of the girder as in Fig. 6a at the points m_o and m_u only produces a nominal displacement towards each other of the points m_o and m_u themselves and of their respective adjacent points $m + 1_o$ and $m + 1_u$, and $m - 1_o$ and $m - 1_u$, so that all values of ζ, with the exception of ζ_{m-1}, ζ_m and ζ_{m+1}, differ only imperceptibly from zero. This created the

[4] „Der Stahlbau" 1931, H. 15.

extremely important possibility of determining all deformations caused by loading of the kind shown in Fig. 6d by means of equational systems containing only three unknown quantities. The deformation of the loaded boom — in this case the lower boom — under loading as in Fig. 6a, is naturally the influence line for the displacement ζ_m, which affects only the range from ζ_{m-2} to ζ_{m+2} (Fig. 6b). Now as each ζ_m produces definite forces in the members in the two adjacent fields, the additional influence lines for these members can be determined quite simply by superposing the influence lines of the individual values of ζ_m, these lines being then added to those obtained for the main system. The latter now become the ultimate lines of influence and assume the forms shown in Fig. 7a—d.

It should be noted that the influence lines which I obtained in this manner coincide with astonishing accuracy with those found by *Christiani*. (Cf. Fig. 16 of the treatise referred to under 4).

From this — though at first only for the girder examined — we ascertain the following facts: —

1) The girder (Fig. 3) is stable even without stability bar; definite and absolutely normal influence lines are obtained for all its web members.
2) The effect of a vertical stability bar inserted in one of the rhomboids, only extends as far as the adjacent field on each side of the bar.
3) The influence lines of the bars, particularly those of the struts, do not alternate with abrupt breaks between positive and negative values from field to field, but run quite normally.
4) The form of the influence lines deviate to a great extent from that obtained when assuming frictionless hinges, while the lines obtained by dividing the system into partial lattice systems are approximately correct (Fig. 7e—h).
5) The influence of the rigidity of the web members and their rigid joints is insignificant. (Good coincidence of the influence lines).
6) The bending stresses is the chord members computed for train load N attain their maximum value of 420 kg/cm^2.

   Now, however, it may justifiably be objected that the girder here examined, with its very high chords (60 cm with a span of 28 m) is not a girder of the usual type. I have therefore investigated the same girder calculating with the normal boom height of 30 cm. As regards the influence lines pertaining to the bar forces there was no very great difference, whereas the bending stresses in the booms revealed values decreased by about 30 %. From this the following conclusion may be drawn, very important for the designing and detailing of the rhombic lattice girder.
7) The rigidity of the booms, also usual in other lattice girders, is sufficient for stability even without a stability bar. More rigid booms are a disadvantage, since they involve higher bending stresses in the chords.

On the basis of these results I have had an exact calculation of the main girder system of the Rhine bridge at Wesel worked out on the method here described[5].

[5] *Krabbe:* „Einfluß der Gurtsteifigkeit in ebenen Tragwerken" (Influence of boom rigidity in plane girder systems). Leipzig 1933, Pub. Robert Nosky, pp. 12—17.

The systems in question are two parallel girders, each with a span of 104 m and one central support, and constructed without hinges in the 90 cm boom height quite normal and usual for lattice girders[6]. Regarding the details of calculation I would refer to the treatise mentioned under 5) and may therefore be allowed to confine myself here to the main results yielded by this calculation. In Fig. 8 will be found the influence line for one upper and for one lower chord member, and for one tension and one compression bar. In Fig. 2 is shown the influence line for the moment pertaining to the lower chord member, calculated

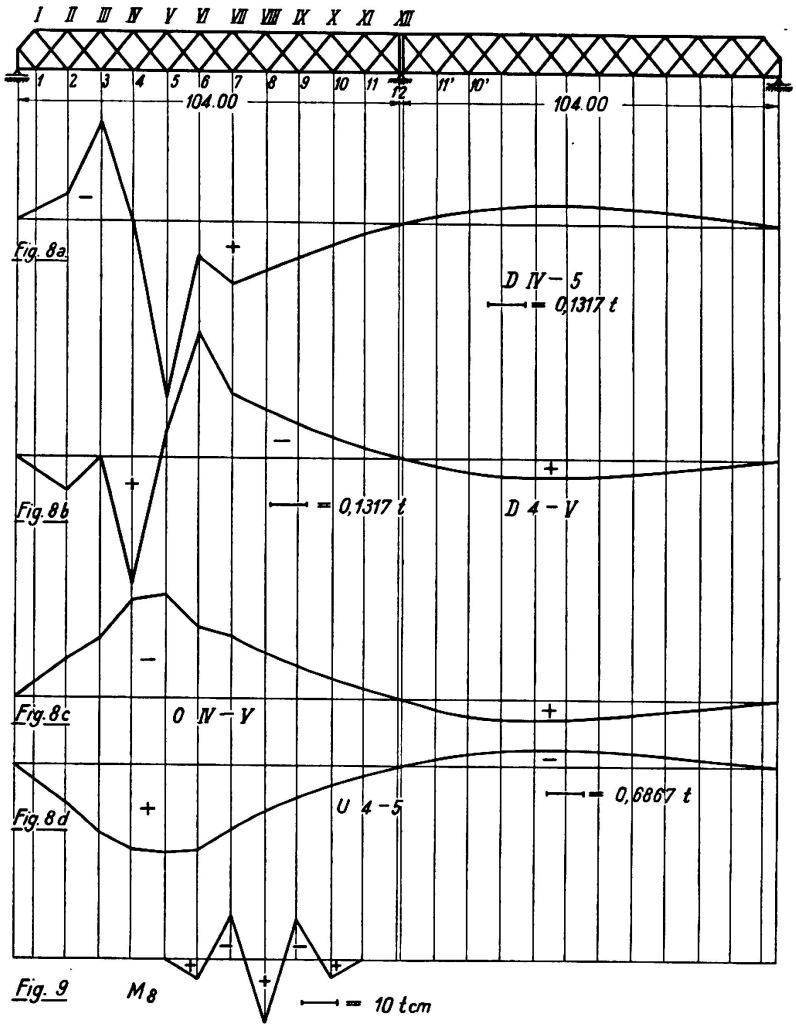

Fig. 8—9.

at a panel point. The influence line in Fig. 1a, calculated with the kinematic method, and the influence line in Fig. 1b, obtained by dividing the system into partial lattice systems, should be compared with the influence line of the strut D_{4-V}. There can be no doubt whatever that the influence line in Fig. 1b is a much closer approximation to reality than the line in Fig. 1a. My conclusion therefrom is that the kinematic method with assumed hinges at the panel points is not practicable for rhombic lattice girders, but that good approximative values can be obtained by dividing the system into two partial lattice girder

[6] Die Bautechnik 1927, H. 45/46.

systems, though exact calculation is necessary whereby allowance is made for the rigidity of the booms.

The influence line for the bending moment in the lower chord member gives bending stresses of about 260 kg/cm² for the most unfavourable loading arrangement with a load train N. On superimposing the influence lines and bar stresses, however, additional stresses of only about 10 kg/cm² were obtained, in practice these may be regarded as quite insignificant.

Finally, I calculated the deflection line — in Fig. 2a obtained by the kinematic method and in Fig. 2b by measurement — under a single load and taking boom

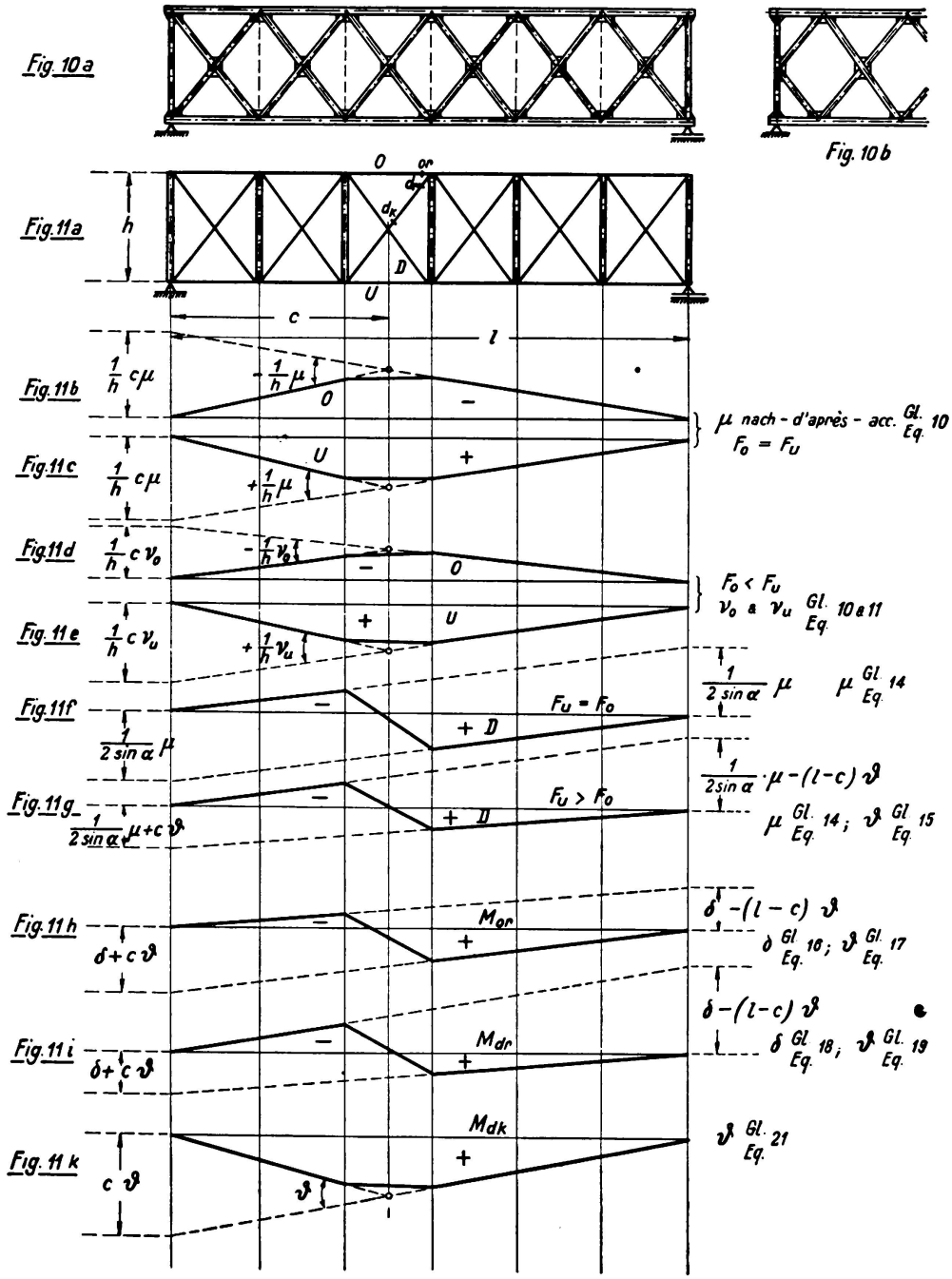

Fig. 10—11.

rigidity into consideration. The result will be seen in Fig. 2e. The coincidence with the bending line measured under single load, and especially as regards the kinks produced, may be regarded as surprisingly good.

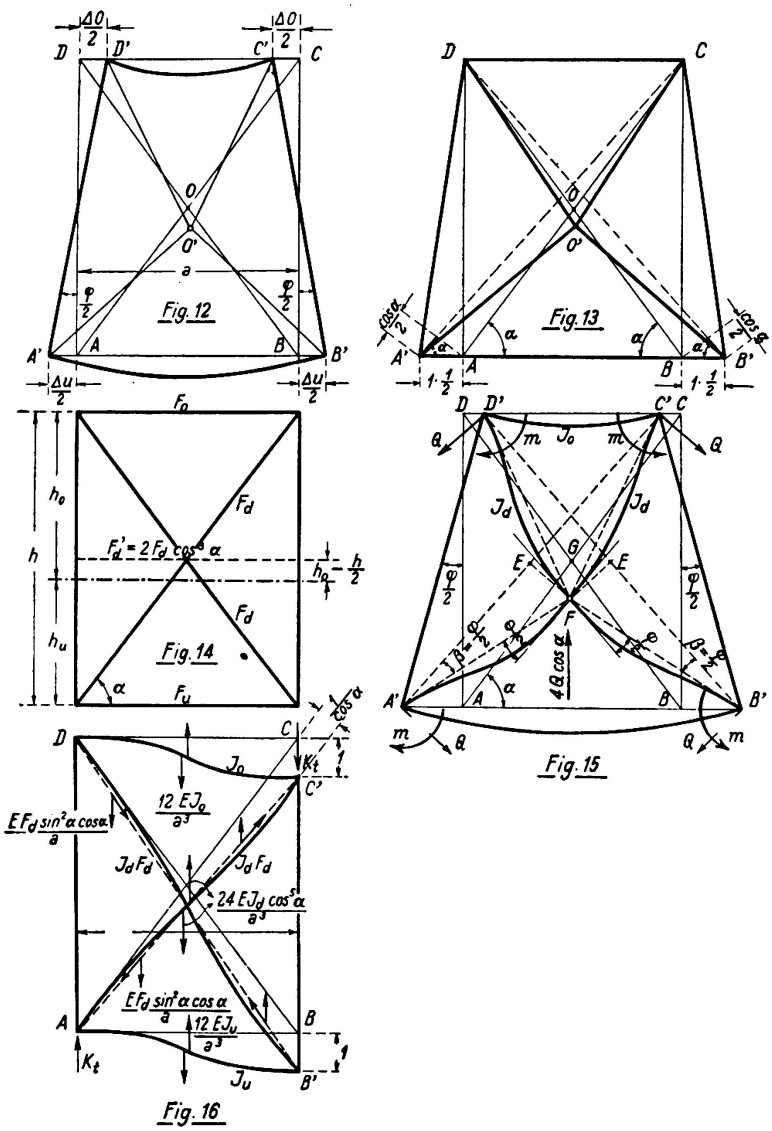

Fig. 12—16.

III. Further Influence of Rigidity of Struts and of their Rigid Connections at the Panel Points.

1. *General.*

Even though the method as it has been developed up to the present evidently yields results offering quite a fair approximation to reality, and though it is simple in application, yet it will become clear when a rhombic lattice girder system — as for instance that of the Rhine bridge at Wesel — is examined, that such systems, whose struts are generally connected by thick gussets at the points of intersection, are in their action more nearly a system of rigidly fixed method to include the rigidity of the struts as well, and in addition take unequal cross sections and moments of inertia of the booms into consideration. This will enable us, too, to deduce with accuracy the bending stresses occurring in the

struts. The application of the method to the rhombic lattice girder is depicted in Fig. 10 a. It is fundamentally of no importance for the functioning of the method whether the verticals shown in dotted lines are present in one or more of the bays. Nor does it matter in the treatment of the case whether the girder is terminated at either end by an entire rhomboid (Fig. 10 b) or with a semi-rhomboid (Fig. 10 a). As a matter of fact, the latter form of termination is statically much more preferable, as the calculation of the Rhine bridge at Wesel after construction proved. As main system we shall take the girder in Fig. 11 a, which has a rigid vertical post in each rhomboid bay, rigidly connected with the boom members and struts.

First of all it is necessary to lay down some basic conceptions essential for the ensuing treatment of the case. The girder here examined possesses, as does every lattice girder, a moment of inertia J_f, which alters from bay to bay and is composed of:

1) The moment of inertia J_f of the lattice system as such, the members being considered as having no mass,
2) A portion due to the moments of inertia of the boom members, J_o and J_u,
3) A portion due to the moments of inertia of the lattice bars J_g.

1) If upper and lower booms are of the same cross section, the lower boom member will be lengthened, under purely bending stress, to the same extent as the upper boom member is shortened (Fig. 12). The length of the struts, considered as massless, does not alter; they remain free from stress and do not contribute to the moment of inertia J_f. The gravity axis lies in the centre and it is a simple matter of

$$J_f = \frac{h^2}{4}(F_o + F_u). \tag{1}$$

If, however, upper and lower boom members are of unequal cross section, the sum of the longitudinal deformations of the two boom members will not be zero; this causes longitudinal deformations and forces in the struts. Thus the latter also contribute to the moment of inertia J_f. According to Fig. 13 an elongation of both struts by $\frac{1}{2}\cos\alpha$ corresponds to each elongation of a boom member by the unit One, thus giving in each strut a force

$$D = \frac{1}{2}\frac{EF_d}{a}\cos^2\alpha,$$

whose horizontal lateral forces are

$$D' = \frac{1}{2}\frac{EF_d}{a}\cos^3\alpha.$$

As regards their contribution to the moment of inertia J_f we can therefore imagine the two struts, as in Fig. 14, replaced by a horizontal bar passing through the point of intersection of the struts and with a cross section of

$$F'_d = 2\,F_d\cos^3\alpha. \tag{2}$$

The position of the horizontal gravity axis is then given, using the notations employed in Fig. 14, by

$$h_o = \frac{h}{2} \frac{2 F_u + F'_d}{F_o + F_u + F'_d}$$

$$h_u = \frac{h}{2} \frac{2 F_o + F'_d}{F_o + F_u + F'_d},$$

and the distance of the centre of gravity from the centre is

$$h_o - \frac{h}{2} = \frac{h}{2} \frac{F_u - F_o}{F_o + F_u + F'_d};$$

from which we obtain the moment of inertia

$$J_f = \frac{h^2}{4} \left[F'_d + \frac{4 F_o F_u + F'^2_d}{F_o + F_u + F'_d} \right]; \tag{3}$$

for $F_o = F_u$ Eq. 3 becomes Eq. 1.

2) Independently of the position of the gravity axis the boom members contribute an additional moment of inertia $J_o + J_u$.

3) For a distortion as in Fig. 15 with a distortion angle of φ, the point of intersection of the struts can, for kinematic reasons, only lie is at the point of intersection F which is found by erecting a perpendicular through the points E of A′C′ and B′D′. Then

$$EG = \frac{AA' + CC'}{2}; \quad \sphericalangle EFG = \alpha$$

so that the triangle $EFG \sim CAB$;

hence
$$\frac{EG}{EF} = \frac{h}{d} = \frac{AA' + CC'}{2\,EF}$$

or
$$\frac{EF}{d} = \frac{AA' + CC'}{2\,h}$$

from which it follows that $\sphericalangle \beta = \frac{\varphi}{2}$.

The end tangents of the struts must therefore lie in the straight lines C′F and D′F.

Deformation of the struts thus occurs in the manner shown by boldly drawn lines with an angle of distorsion of $\frac{\varphi}{2} = \beta$. The struts act in this deformation on the structure at the points A′B′C′D′ with transverse forces Q and moments M, the total moment exerted by deformed struts on the girder being:

$$M = -2\,Q \frac{d}{2} + 2\,\mathfrak{M}$$

$$Q = \frac{4 \cdot 6 \cdot EJ_d}{d^2} \frac{\varphi}{2}; \quad \mathfrak{M} = \frac{2 \cdot 2\,EJ_d}{d} \cdot \frac{\varphi}{2}$$

$$M = -\frac{8\,EJ_d}{d} \varphi = -\frac{8\,EJ_d \cos \alpha}{a} \varphi.$$

The total contribution of the struts to the stiffness against bending, i. e. to the moment of inertia of the structure, is therefore:

$$J'_d = 8\, J_d \cos\alpha = J_g. \tag{4}$$

This is four times the resistance that two intersecting struts, not connected in the middle, would offer.

The total moment of inertia of the system is therefore:

$$J_t = J_f + J_o + J_u + 8\, J_d \cos\alpha, \tag{5}$$

whereby J_f can be determined by Eq. 1 or 3.

We can lay down similar conceptions as regards transverse force. The displacement of the two rigid posts by the unit One (Fig. 16) is resisted by the whole system, the actual resistance offered being K_t. Now the lengthening of the two struts is

$$\Delta = \pm 1 \cdot \sin\alpha;$$

so that the force in the struts $D = \pm 1 \dfrac{E F_d \sin\alpha \cos\alpha}{a}$.

The vertical lateral force of both struts together is thus

$$K_f = 1 \frac{2 \sin^2\alpha \cos\alpha\, E F_d}{a} \tag{6}$$

in other words, the transverse resistance of the lattice structure, whose web members are imagined as being without mass; the boom members remain without stress.

In consequence of the bending of both boom members we receive further:

$$K_o + K_u = 1 \frac{12\,(J_o + J_u)\,E}{a^3}. \tag{7}$$

The bending of the two struts, the ends of which have turned by $\dfrac{d}{1 \cdot \cos\alpha}$ towards the axis of the member, set up a transverse stiffness

$$K_d = 1 \frac{24\, E J_d \cos^5\alpha}{a^3}. \tag{8}$$

Thus the total resistance of the system is

$$K_t = K_f + K_o + K_u + K_d = 1 \frac{2\,E}{a}\left[F_d \sin^2\alpha \cos\alpha + 6 \frac{J_o + J_u + 2\, J_d \cos^5\alpha}{a^2}\right]. \tag{9}$$

In this connection it should be remarked that in normal constructions, as for instance the Rhine bridge at Wesel, the transverse stiffness of the bridge increases by about 13 % owing to the stiffness to bending offered by the boom members and struts. It is therefore hardly advisable to neglect the rigidity of the web members at this juncture. The increase in the moment of inertia of the whole structure by the stiffness of the members is, however, very slight and does not exceed 1 %.

2) *The influence lines for the main system*[7].

a) *The influence lines of the forces in the boom members.*

The influence line of the upper boom member is defined by the bending line of the loaded boom (lower boom), which line is given by the elongation of the upper boom member by the unit One. We lengthen the upper boom member by One (Fig. 17) by cutting it through the middle and applying a force X to form a gap at that place whose width is One. Then, if we first neglect the resistance to bending of the members, the forces in the members are set up as shown in Fig. 17. Under the action of the force X, which shortens upper

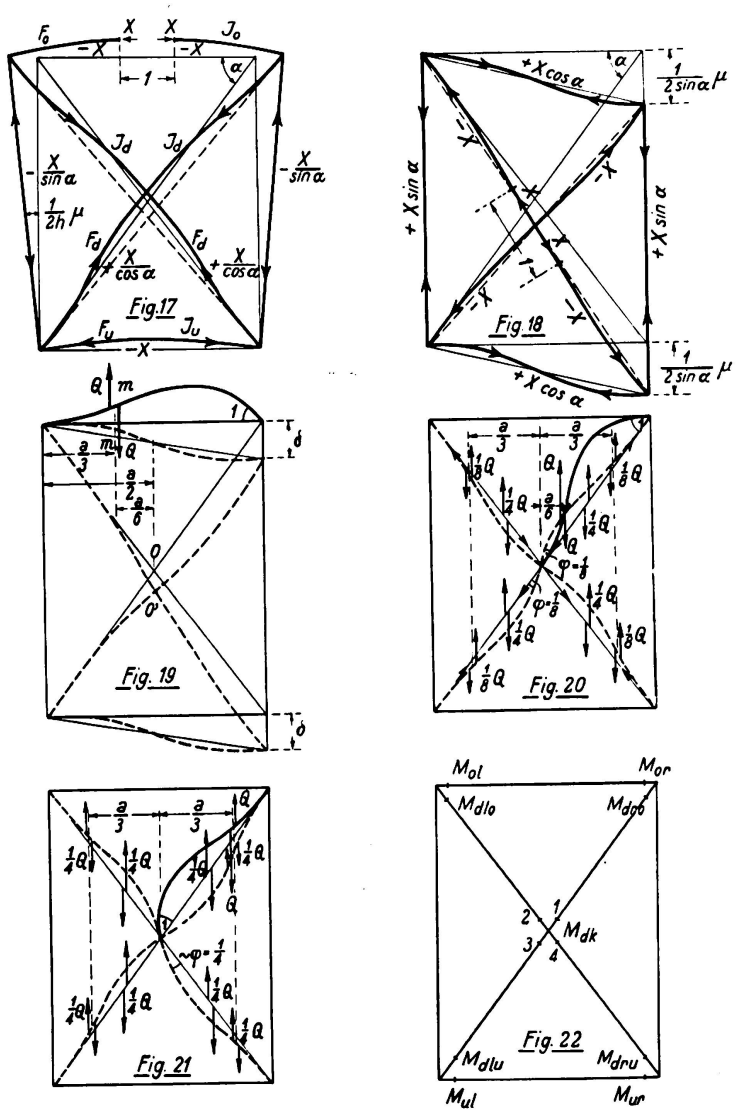

Fig. 17—22.

and lower boom member to the same extent provided they have the same cross section, the two posts turn towards each other by the angle $-\frac{1}{h}$. In this way the influence line for 0 would be defined for the lattice system proper.

[7] Compare with the manner of illustrating influence lines generally used in this paper the author's article in „Der Stahlbau" 1933, H. 2.

As, however, the deformed boom members and struts exert a counter-action, the angle of torsion is smaller than $\frac{1}{h}$, say $\frac{1}{h}\mu$. From this we obtain by direct reference to Eq. 1, 3 and 5:

$$\mu = \frac{J_f}{J_t}. \tag{10}$$

The influence line for the upper boom member 0 is therefore distinguished by the angle of torsion 1 μ and is of the form shown in Fig. 11 b. The influence line for the lower boom member U is obtained in a corresponding manner (Fig. 11 c).

If the upper and lower boom members have the same cross section, the angle of torsion will no longer be independent of X, since upper and lower booms, although the same forces X are present in their members, for this very reason undergo different deformations.

Since the external force X forces the two parts of the cut upper boom apart to the distance One, we have according to the Clapeyron Theorem

$$1 \cdot X = \frac{X^2 a}{EF_o} + \frac{X^2 a}{EF_u} + 2\frac{X^2 a}{EF_d \cos^3 \alpha};$$

As the value X = 0, which would satisfy the equation is of no importance, we get

$$X = 1 - \frac{EF_o F_u}{a\left(F_o + F_u + \frac{2 F_o F_u}{F_d \cos^3 \alpha}\right)}.$$

Thus the total elongation of the upper boom member is

$$\Delta_o = 1 - \frac{Xa}{EF_o};$$

and the elongation of the lower boom member

$$\Delta_u = -\frac{Xa}{EF_u};$$

so that the angle of torsion

$$\vartheta_o = \frac{\Delta_u - \Delta_o}{h} = -\frac{1}{h}\left[1 - \frac{F_o - F_u}{F_u + F_o + 2\frac{F_u F_o}{F_d \cos^3 \alpha}}\right]. \tag{10}$$

Putting the bracket term = ν_o, we can write

$$\vartheta_o = -\frac{1}{h}\nu_o. \tag{11}$$

For the lower boom member a corresponding deduction gives the coefficient

$$\nu_u = 1 + \frac{F_o + F_u}{F_u + F_o + \frac{2 F_u F_o}{F_d \cos^3 \alpha}} \tag{12}$$

$$\vartheta_u = + \frac{1}{h} v_u. \tag{13}$$

The two influence lines are shown in Fig. 11 d—e, the stronger boom naturally receiving the greater member force.

b) *The influence lines of the struts.*

The influence line of the strut C B (Fig. 18) is obtained as the deflection line of the lower boom, due to the elongation of the strut by the unit One. Assuming the members to be massless, a force X thrusting the ends of the severed strut apart a distance of One produced the member forces shown in Fig. 18. Apart from this elongation of One, the two struts shorten to the same extent, causing a vertical displacement $\frac{1}{2 \sin \alpha}$ of the rigid posts in the direction of each other. This produces the deflection line of the lower boom as illustrated in Fig. 11 f, and with it the influence line for the strut. In consequence of the rigidity of the boom members and struts, however, the vertical displacement of the posts towards one another is reduced; let it be $\frac{1}{2 \sin \alpha} \mu$. Then we have

$$\mu = \frac{K_f}{K_t} \qquad \text{(Equations 6–9).} \tag{14}$$

from which we get the influence line in Fig. 11 f.

Now if the upper and lower boom members have not the same cross section, their different elongation for the same force $+ X \cos \alpha$ also produces a distortion of the rigid posts in the direction of each other to the extent of the angle ϑ, which in this case, using Eq. 10, gives:

$$\vartheta = - \frac{1}{h} \frac{F_u - F_o}{\left[F_u + F_o + \frac{2 F_u F_o}{F_d \cos^3 \alpha}\right] \cos \alpha}. \tag{15}$$

From this is obtained the influence line in Fig. 11 g.

c) *The influence lines for moments at the corners of members.*

The influence line for the moment at the right-hand end of the upper boom member (Fig. 19) is obtained as the deflection line of the loaded boom, produced by buckling of the member at its right-hand end by the angle One. Buckling causes in the member a transverse force

$$Q = + \frac{6 E J_o}{a^2};$$

and produces a displacement of the rigid posts vertically in the direction of each other to the extent of

$$\delta_{or} = 1 \frac{Q}{K_t}, \qquad (K_t \text{ see Eq. 9})$$

$$\delta_{or} = + 1 \frac{6 E J_o}{a^2 K_t} \tag{16}$$

Furthermore, in the vertical section immediately to the right of D acts an anti-clockwise moment

$$M = -\frac{EJ_o}{a}$$

and in the section immediately to the left of O the reverse moment

$$M = +\frac{E\,J_o}{a};$$

causing in the girder a positive angle of torsion of the two rigid posts to each other

$$\vartheta_{or} = \frac{M\,a}{E\,J_t}$$

or

$$\vartheta_{or} = +\frac{J_o}{J_t}. \tag{17}$$

The influence line caused by the displacement δ and the torsion ϑ is illustrated for M_{or} in Fig. 11^h.

The influence line for the moment at the upper end of the strut rising to the right $M_{d\,ro}$ is obtained as the deflection line of the loaded boom due to a crack of the angle one at the upper end of this bar (Fig. 20).

In consequence of this, however, the cross at 0 is now stressed with a moment $= -\frac{4\,E\,J_d \cos\alpha}{a}$ and turns under the influence of this moment stress in an anti-clockwise direction by the angle $\frac{1}{8}$, whereby the struts denoted by dotted lines undergo additional bending. Then there is no longer a moment acting at the point 0, for each of the 4 deformed half-struts stresses it with $+\frac{EJ_d \cos\alpha}{a}$.

When this deformation takes place the transverse forces illustrated in Fig. 20 are produced in the sections both to the left and to the right of 0 — i e. in the whole bay-whereby

$$Q = \frac{24\,EJ_d \cos^3\alpha}{a^2}$$

$$\left.\begin{array}{ll} \text{the force to the right being} & Q - 2\frac{Q}{8} - \frac{2\,Q}{4} = \frac{Q}{4} \\ \text{and that to the left} & 2\cdot\frac{Q}{4} - 2\cdot\frac{Q}{8} = \frac{Q}{4} \end{array}\right\} = \frac{6\,EJ_d \cos^3\alpha}{a^2}$$

This produces a displacement of the rigid posts towards each other to the extent of

$$\delta_{d\,ro} = +\frac{6\,EJ_d \cos^3\alpha}{a^2\,K_t}. \tag{18}$$

Furthermore, an anti-clockwise moment of

$$M = -\frac{4\,EJ_d \cos\alpha}{a} + 2\frac{EJ_d \cos\alpha}{a} = -\frac{2\,EJ_d \cos\alpha}{a},$$

acts at 0 in the vertical section immediately to the right of 0, and a moment of

$$M = +2\frac{EJ_d \cos\alpha}{a}.$$

acts in the vertical section immediately to the left of 0.

This moment must be counteracted by a contrary moment produced by bending of the whole system, and this necessitates an angle of torsion of the girder amounting to

$$\vartheta_{d\,ro} = \frac{M\,a}{E\,J_t} = -\frac{2\,J_d \cos\alpha}{J_t}. \tag{19}$$

The influence lines for $M_{d\,ro}$ due to the displacement δ and the distortion ϑ are illustrated in Fig. 11 i.

The influence line for the moment at the corner of the same strut directly to the right of 0 is obtained as the deflection line of the loaded boom, produced by cracking this member at K by the angle One (Fig. 21). In the same manner as before the stressing at the cross at O,

$$\frac{8\,E\,J_d \cos\alpha}{a}$$

determines the additional distorsion of the cross (shown in dotted lines) with an angle of torsion of $\frac{1}{4}$, whereby the cross at 0 is again free from moments. As before, too, we now get:

$$Q = 0$$

from which also follows that

$$\vartheta_{dk} = 0. \tag{20}$$

To the immediate right and left of 0 the respective moments

$$M = \pm\frac{4\,EJ_d \cos\alpha}{a}.$$

now begin to act. This moment must be counteracted by another produced by the bending of the whole girder, and for this the following angle of torsion of the girder is necessary:

$$\vartheta_{dk} = +\frac{4\,EJ_d \cos\alpha}{J_t}. \tag{21}$$

It is extremely interesting to note here that the angle of torsion ϑ producing the line of influence M_{dk} is, according to Eq. 21 twice as great as the angle of torsion producing the line of influence for $M_{d\,or}$ as given by Eq. 19, and is preceded by a contrary sign. For this corresponds exactly to the bending deformation of the struts as calculated on distortion proper, i. e. on the actual moment stressing as given by Fig. 15. Further, it can clearly be seen from Fig. 16 that the moment M_{dk} does not appear when a purely parallel displacement of the rigid posts occurs. Vice versa, therefore, cracking of the strut immediately to the right of 0 cannot, according to Fig. 21, produce any transverse force to displace the posts in a parallel direction (*Maxwell*'s Theorem); this is confirmed by Eq. 20.

It is not necessary separately to determine the influence lines for the remaining termini of the members, for the sign preceding the values of δ and ϑ in the individual cases can be obtained with the denominations given in Fig. 22 form Fig. 15 (moment stressing) and Fig. 16 (transverse force stressing). The respective signs are as follows:

for	or	ol	ur	ul	d_{ro}	d_{lo}	d_{ru}	d_{lu}	d_k
δ	+	−	+	−	+	−	+	−	o
ϑ	+	+	+	+	−	−	−	−	+

(22)

Thus all the lines of influence for the girder chosen as main system (Fig. 11a) with in the panel points rigidly connected posts are determined.

For these fundamental influence lines various types of upper and lower boom structure have been considered with respect to their cross section and moments of inertia. However, we shall not make allowance for these when correcting these influence lines as we shall now proceed to do. In order to keep the procedure from becoming to circumstantial, we shall assume symmetry to the horizontal axis of the girder. (For definite reasons we shall take the boom remote from the bridge decking as the basis of our measurements for both chords). At the end we shall mention a simple possibility, in the form of an approximation process, for subsequently carrying out the corrections necessitated by unsymmetry.

3. *The resolution of the rigid joints of the supplementary posts into hinged joints.*

If the supplementary posts let into the structure (Fig. 11a) are not rigidly connected but hinged at the panel points, the points will turn by certain angles of torsion towards the axes of the rigid posts each time the girder is subjected to bending (influence lines). These torsions will all take place in the same relative direction, namely antisymmetrically to the horizontal axis of the girder. Independently hereof, however, it may also happen that the panel points of the upper and lower booms turn reversely, i. e. symmetrically to the axis of the girder.

a) *Antisymmetrical distortion of the upper and lower boom panel points.*

If we turn the points om and um in the same relative direction towards the axis of the supplementary post m by an angle of torsion of φ (Fig. 23), the deformation shown in Fig. 23a ensues on our first regarding the points as perpendicularly non-displaceable, i. e. restraining the central crosses of the points 0_m and 0_{m+1} of intersection of the struts. In consequence, however, this cross is now loaded with a moment of left-hand rotary direction, namely $-2\,\dfrac{2\,E\,J_d}{\frac{d}{2}}\,\varphi$.

This moment is nullified by turning the cross left an angle of $\frac{1}{4}\,\varphi$. The crosses therefore turn by $\frac{1}{4}\,\varphi$ and thus the deformation shown in Fig. 23b occurs.

If we now compare this illustration with Figs. 19—20, we shall see that double the aggregate deformation shown in Figs. 19—20 has occurred in both panels — in a contrary sense in field m + 1. From this it can at once be seen that, in respect to equations 16 to 19, the following additional deformations are necessary for the equalisations of the moments and transverse forces caused by deformation:

Panel m:

$$\delta_m = +1\left[\frac{6\,E\,(J_o + J_u)_m}{a^2\,K_{tm}} + \frac{12\,E J_{dm}\cos^3\alpha}{a^2\,K_{tm}}\right]\varphi$$

$$= +1\,\frac{6\,E\,(J_o + J_u + 2\,J_d\cos^3\alpha)_m}{a^2\cdot K_{tm}}\,\varphi$$

$$\vartheta_m = +\frac{(J_o + J_u + 2\,J_d\cos\alpha)_m}{J_{tm}}\,\varphi$$

Panel m + 1:

$$\delta_{m+1} = -1\,\frac{6\,E\,(J_o + J_u + 2\,J_d\cos^3\alpha)_{m+1}}{a^2\,K_{t\,(m+1)}}\,\varphi$$

$$\vartheta_{m+1} = -\frac{(J_o + J_u + 2\,J_d\cos\alpha)_{m+1}}{J_{t\,(m+1)}}\,\varphi.$$

This deformation of the girder is shown in Fig. 25c. Of course, to the left of m — 1 and right of m + 1 the other panels normally link up with the posts and the points of support A and B are transferred to A′ and B′. When the conditions necessary for support have been restored by the straight line connecting A′ and B′, we obtain the amount of bending to which the lower boom has been subjected by the angle of torsion $\varphi_m = 1$, i. e. by the condition $'\varphi_m = 1'$.

In this condition the crosses formed by om and um, o (m — 1) and u (m — 1), o (m + 1) and u (m + 1) are loaded by moments, and since we assume symmetry, the moments are the same in the upper and lower crosses.

For each of the crosses om and um we find the loading to be:

From Fig. 23a:

$$M'_{mm} = -\frac{4\,E\,(J_{o\,m} + J_{o\,(m+1)})}{a} - \frac{4\,E\,J_{dm} + J_{d\,(m+1)}}{a} - \frac{6\,E\,J_v}{h}.$$

From Fig. 23b:

$$M''_{mm} = +\frac{(J_{dm} + J_{d\,(m+1)})\cos\alpha}{a}.$$

From Fig. 23c: (Cf. Fig. 15—16)

$$M'''_{mm} = \frac{E}{a}\Big[J_{om}\,\vartheta_m + J_{o\,(m+1)}\,\vartheta_{(m+1)} - 4\,J_{dm}\cos\alpha\,\frac{\delta_m}{2}$$

$$- 4\,J_{d\,(m+1)}\cos\alpha\,\frac{\vartheta_{m+1}}{2} + 6\,J_{o\,m}\,\frac{\delta_m}{a} + 6\,J_{o\,(m+1)}\,\frac{\delta_{m+1}}{a}$$

$$+ 6\,J_{dm}\,\frac{\delta_m}{a}\cos^3\alpha + 6\,J_{o\,(m+1)}\,\frac{\delta_{m+1}}{a}\cos^3\alpha\Big].$$

We find the loading of each of the crosses o (m — 1) and u (m — 1) to be:

From Fig. 23a:

$$M'_{(m-1)\cdot m} = -\frac{2\,E J_{om}}{a}.$$

From Fig. 23b:

$$M''_{(m-1)m} = +\frac{E\,J_{dm}\cos\alpha}{a}.$$

From Fig. 23c:

$$M'''_{(m-1)m} = +\frac{E}{a}\left[-J_{om}\,\vartheta_m + 4\,J_{dm}\cos\alpha\,\frac{\vartheta_m}{2} + 6\,J_{om}\frac{\delta_m}{a} + 6\,J_{dm}\frac{\delta_m}{a}\cos^3\alpha\right].$$

Finally, for each of the crosses $o\,(m+1)$ and $u\,(m+1)$ we find the load From Fig. 23a:

$$M'_{(m+1)m} = -\frac{2\,E J_{o\,(m+1)}}{a}.$$

From Fig. 23b:

$$M''_{(m+1)m} = +\frac{E\,J_{d\,(m+1)}\cos\alpha}{a}$$

From Fig. 23c:

$$M'''_{(m+1)m} = \frac{E}{a}\left[-J_{o\,(m+1)}\,\vartheta_{m+1} + 4\,J_{d\,(m+1)}\cos\alpha\,\frac{\sigma_{m+1}}{2} + 6\,J_{o\,(m+1)}\frac{\delta_{m+1}}{a} + 6\,J_{d\,(m+1)}\frac{\delta_{m+1}}{a}\cos^3\alpha\right].$$

The total loading of the upper and lower crosses is thus:

$$M_{mm} = 2\,(M'_{mm} + M''_{mm} + M'''_{mm}) \tag{23}$$

$$M_{(m-1)m} = 2\,(M'_{(m-1)m} + M''_{(m-1)m} + M'''_{(m-1)m}) \tag{24}$$

$$M_{(m+1)m} = 2\,(M'_{(m+1)m} + M''_{(m+1)m} + M'''_{(m+1)m}). \tag{25}$$

If we now consider the deformations, in Figs. 17—18, causing the influence lines of the main system in their quality as deflection lines of the loaded boom, we shall find that for these deformations there exists a basic loading of the panel points of the deformed panel; this we shall call M_{om}. It is the same for upper and lower boom panel points; for both together we find in Fig. 17 (influence line for the upper boom member):

$$M_{o\,(m-1)} = \frac{2\,E}{a\,h}\,[J_o + J_u + 2\,J_d\cos\alpha] \quad (\text{wobei } J_o = J_u) \tag{26}$$

$$M_{om} = -M_{o\,(m-1)}. \tag{27}$$

For the deformation according to Fig. 18 (influence line for the strut) we obtain:

$$M_{o\,(m-1)} = M_{om} = \frac{6\,E\,(J_o + J_u)}{a}\,\frac{1}{2\sin\alpha}\,\mu + \frac{12\,E J_d}{a}\cos^3\alpha\,\frac{1}{2\sin\alpha}\,\mu \tag{28}$$

$$= \frac{3\,E}{a\sin\alpha}\,\mu\,(J_o + J_u + 2\,J_d\cos^3\alpha) \quad (\text{wobei wieder } J_o = J_u).$$

Now as moments cannot occur at these points when hinges are substituted for the rigid connections of the posts, the following equation holds good in every case for each pair of points:

$$M_m = 0 = M_{om} + M_{m(m-1)}\,\varphi_{m-1} + M_{mm}\,\varphi_m + M_{m(m+1)}\,\varphi_{m+1} \tag{29}$$

There can be no other elements. Thus for n panel-points we always have a system of equations with n unknown angles of torsion φ_m of the *Clapeyron* form, as for instance for the influence line of the strut D in the girder 11a:

	φ_1	φ_2	φ_3	φ_4	φ_5	φ_6	φ_7	
1	M_{11}	M_{12}						
2	M_{21}	M_{22}	M_{23}					
3		M_{32}	M_{33}	M_{34}				M_{03}
4			M_{43}	M_{44}	M_{45}			M_{04}
5				M_{54}	M_{55}	M_{56}		
6					M_{65}	M_{66}	M_{67}	
7						M_{76}	M_{77}	

(29a)

But each of these angles of torsion φ_m corresponds to a definite deflection line of the loaded boom (Cf. Fig. 23e), i. e. the deflection line for the condition $\varphi_m = 1$ multiplied by φ_m. These seven bending lines are therefore to be added to the bending lines given in Fig. 18 for the loaded boom, whereupon we have the influence line for the girder *with hinge-jointed supplementary posts.*

To obtain the influence line for the boom member O (Figs. 17—11b) we use the same equational system, introducing as independent elements in Columns 3 and 4 the values M_{o3} and M_{o4} on the basis of Eq. 26—27.

b) Symmetrical distortion of the upper and lower boom panel points.

If, however, it is a question of correcting the lines of influence produced by the deformations shown in Figs. 19, 20 and 21, we notice that there the upper and lower boom panel points are loaded with unequal moments.

For these deformations we find in all three cases, besides the equal loading of upper and lower boom panel points m — 1 and m, which loading we write $M_{o(m-1)}$ and M_{om}, and additional loading of the upper points, namely

in Fig. 19:

$$M_{m-1} = -\frac{2\,E\,J_o}{a}; \qquad M_m = -\frac{4\,E\,J_a}{a}; \tag{30}$$

in Fig. 20:

$$M_m = -\frac{8\,E\,J_d \cos\alpha}{a}; \tag{31}$$

in Fig. 21:

$$M_m = +\frac{4\,E\,J_d \cos\alpha}{a}. \tag{32}$$

Dividing this loading into anti-symmetrical and symmetrical moments of the upper and lower boom panel points, we can write, say, for

for $-\frac{2\,EJ_o}{a}$ in Fig. 19

1. top: $-\frac{EJ_o}{a}$; bottom: $-\frac{EJ_o}{a}$ (Anti-symmetrical portion of loading

2. top: $-\frac{EJ_o}{a}$; bottom: $+\frac{EJ_o}{a}$ (symmetrical portion of loading

Together top: $-\frac{2\,EJ_o}{a}$; bottom: 0.

The deformations produced by the anti-symmetrical portions of the loading can be obtained by using the method given under a). Summating top and bottom panel points, however, we have to consider that *symmetrical distortion* corresponds also to symmetrical distortions of the upper and lower panel points (Fig. 24). Let us call this angle of distortion ψ. In contrast to Fig. 23a, Fig. 24 shows that the central crosses O_{m-1} and O_m are unloaded, i. e. are not subjected to distortion, and further, that transverse forces and moments in the two panels cease, no that no further displacements occur either.

In this case let us write distortions and moment-loadings as positive, when they turn or load the upper boom cross positively. At once we obtain the following:

$$M_{mm} = -\frac{8\,E}{a}\left[J_{om} + J_{o(m+1)} + 2\,(J_{dm} + J_{d(m+1)})\cos\alpha\right] - 2\,\frac{EJ_v}{h} \tag{33}$$

$$M_{(m-1)m} = -\frac{4\,EJ_{om}}{a} \tag{34}$$

$$M_{(m+1)m} = -\frac{4\,EJ_{o(m+1)}}{a}. \tag{35}$$

The deformation caused by the symmetrical loading of the top and bottom boom panel points is therefore given by an equational system of the *Clapeyron* type corresponding to Eq. 29. For the deformation in Fig. 19, for instance:

	ψ_1	ψ_2	ψ_3	ψ_4	ψ_5	ψ_6	ψ_7	
1	M_{11}	M_{12}						
2	M_{21}	M_{22}	M_{23}					
3		M_{32}	M_{33}	M_{34}				$-\frac{EJ_o}{a}$
4			M_{43}	M_{44}	M_{45}			$-\frac{2\,EJ_o}{a}$
5				M_{54}	M_{55}	M_{56}		
6					M_{65}	M_{66}	M_{67}	
7						M_{76}	M_{77}	

(36)

whereby the dependent coefficients have to be determined by Eq. 33—35 and the independent elements by Eq. 30.

In this case we therefore get 7 symmetrical angles of torsion ψ, but they differ greatly from the angles of torsion φ in that they do not cause displacement of the panel points of the loaded boom. Thus they do not alter the lines of influence — at least if we assume loading only at the panel points.

However, we shall need the results deduced for the next Section. We now have the exact influence lines for the system with rigid posts hinged at their joints.

4) *Removal of the rigid supplementary posts.*

If we lengthen one of the rigid posts m by the amount η, in other words upwards and downwards respectively by $\frac{1}{2}\eta$, at first retaining its rigid connection on both booms, the deformation shown in Fig. 25 will occur. As there is tension in both struts, compression is set up in all the boom members, which contract accordingly by the amounts γ and γ'. Naturally the deflection of the struts has no influence worth mentioning either on the longitudinal stresses set up in struts and boom members, or on the displacements γ and γ'.

The value γ has already been obtained in the treatise mentioned under 4), in equation 7. Accordingly

$$\gamma = \frac{\sin\alpha\cos^2\alpha\, F_{dm}}{2\,(\cos^3\alpha\, F_{dm} + F_{om})}. \tag{37}$$

Its derivation should be noticed, according to which

$$\gamma' = \frac{\sin\alpha\cos^2\alpha\, F_{d(m+1)}}{2\,(\cos^3\alpha\, F_{d(m+1)} + F_{o(m+1)})}. \tag{37a}$$

Fig. 25 now gives us the displacement of the points of intersection of the struts:

$$\delta = \frac{\gamma}{2} + \frac{h}{4a}\eta$$

or:

$$\delta = \frac{(2\,F_{dm}\cos^3\alpha + F_{om})\,\mathrm{tg}\,\alpha}{4\,(F_{om} + F_{dm}\cos^3\alpha)}\,\eta \tag{38}$$

together with identical δ' for corresponding cross sections of the members in panel $m + 1$.

From the above we now obtain the displacement of the end tangent crosses vertically to the axes of the members: For the inner halves of the struts in panel m

$$\delta \cdot \sin\alpha + \frac{\eta}{2}\cos\alpha$$

and in panel $m + 1$

$$\delta' \sin\alpha + \frac{\eta}{2}\cos\alpha;$$

for the outer halves of the struts:

$$(\delta - \gamma)\sin\alpha \text{ and}$$
$$(\delta' - \gamma')\sin\alpha \text{ respectively.}$$

From this we obtain the bending moments set up at the ends of the members by deformation (Fig. 25). These moments are: in the left hand panel

$$
\left.
\begin{aligned}
M_{or} &= -\frac{\eta}{2}\cdot\frac{6\,EJ_{om}}{a^2} = -3\,\frac{EJ_{om}}{a^2}\,\eta \\
M_{ol} &= +3\,\frac{EJ_{om}}{a^2}\,\eta \\
M_{ur} &= +3\,\frac{EJ_{um}}{a^2}\,\eta \\
M_{ul} &= -3\,\frac{EJ_{um}}{a^2}\,\eta \\
\text{For denominations see Fig. 22}\quad & \left\{
\begin{aligned}
M_{dro} &= -\frac{24\,EJ_{dm}\cos^2\alpha}{a^2}\left(\delta\sin\alpha + \frac{\eta}{2}\cos\alpha\right) \\
M_{dk_1} &= -M_{dro} \\
M_{dru} &= -M_{dro} \\
M_{dk_4} &= +M_{dro}
\end{aligned}
\right. \\
M_{dlo} &= M_{dk_3} = +\frac{24\,EJ_{dm}\cos^2\alpha}{a^2}(\delta-\gamma)\sin\alpha \\
M_{dlu} &= M_{dk_2} = -\frac{24\,EJ_{dm}\cos^2\alpha}{a^2}(\delta-\gamma)\sin\alpha
\end{aligned}
\right\} \quad (39)
$$

The moments at the end of the bars in the right-hand panel are identical with the values of the moments of inertia in panel $m+1$; thus we now obtain the following in the form of symmetrical moment loading of the pairs of crosses m, $m-1$ and $m+1$ for the condition $\eta = 1$, whereby $\eta = 1$ has also to be introduced into equations 39:

$$
M_m = \frac{2E}{a^2}\left[3\,(J_{o(m+1)} - J_{om}) + 24\,J_{d(m+1)}\cos^2\alpha\left(\delta'\sin\alpha + \frac{1}{2}\cos\alpha\right) - 24\,J_{dm}\cos^2\alpha\left(\delta\sin\alpha + \frac{1}{2}\cos\alpha\right)\right] \quad (40)
$$

$$
M_{m-1} = -\frac{2E}{a^2}\left[3\,J_{om} + 24\,J_{dm}\cos^2\alpha\,(\delta-\gamma)\sin\alpha\right] \quad (41)
$$

$$
M_{m+1} = \frac{2E}{a^2}\left[3\,J_{o(m+1)} + 24\,J_{d(m+1)}\cos^2\alpha\,(\delta'-\gamma')\sin\alpha\right]. \quad (42)
$$

If we now apply these moment values as independent elements (Eq. 40—42), in other words as loading elements, in Equation 36, they will give us the torsion angles $\psi \ldots \psi_7$ of the panel points for the condition obtained after the supplementary posts have been replaced by hinges.

To make a distinction between it and the condition $\eta_m = 1$, (Fig. 25), we shall call this deformation "Condition $\zeta_m = 1$" (Fig. 26).

In order to create the condition $\zeta_4 = 1$ we should therefore have to introduce the values M_4, M_3 and M_5 (Equations 40—42) into the horizontal rows 4, 3 and 5 of Eq. 36 in the form of independent elements. These conditions are now

identical with the deformation called "Condition $\zeta_4 = 1$" in Fig. 4 of the treatise mentioned under 4). The forces R_{mn} loading the now hinged supplementary posts, can now be deducted as follows:

First of all, if we assume for the sake of simplicity that $m = 4$, we obtain from Fig. 25, in the form of loading of the posts 3, 4 and 5:

$$\text{Post 4:}\quad \underset{0}{R_{44}} = -(D_4 + D_5)\sin\alpha - \frac{6\,E\,(J_{o4} + J_{o5})}{a^2}\cdot\frac{1}{2\,a}$$
$$- \frac{48\,E\,J_4\cos^3\alpha}{a^2}\left(\delta_4\sin\alpha + \frac{1}{2}\cos\alpha\right)$$
$$- \frac{48\,E\,J_5\cos^3\alpha}{a^2}\left(\delta_5\sin\alpha + \frac{1}{2}\cos\alpha\right)$$

The values D_4 and D_5 have already been given in the treatise under 4), Eq. 10, p. 15. Thus, for instance

$$D_4 = +\frac{\frac{1}{2}\sin\alpha - \frac{\sin\alpha\cos^3\alpha\,F_{d4}}{2\,(\cos^3\alpha\,F_{d4} + F_{o4})}}{a}\,E\,J_{d4}\cos\alpha$$

$$\text{Post 3:}\quad \underset{0}{R_{34}} = -D_4\sin\alpha + \frac{6\,E\,J_{o4}}{a^2}\,\frac{1}{2\,a}$$
$$+ \frac{48\,E\,J_4\cos^3\alpha}{a^2}\,(\delta_4 - \gamma_4)\sin\alpha$$

$$\text{Post 5:}\quad \underset{0}{R_{54}} = -D_5\sin\alpha + \frac{6\,E\,J_{o5}}{a^2}\,\frac{1}{2\,a}$$
$$+ \frac{48\,E\,J_5\cos^3\alpha}{a^2}\,(\delta_5 - \gamma_5)\sin\alpha.$$

If there is an elastic post present at point 4, the value of R_{o44} will be increased by the tension of this post $-1\cdot\frac{E\,F_v}{h}$. Now, however, still further loadings are produced for the posts by reason of the angle of torsion ψ, but here it is sufficient in any circumstances to take into account the loading of the members $m - 1$, m and $m + 1$, in our case R_3, R_4 and R_5.

The following now becomes generally valid:

$$R_m = \frac{6\,E}{a^2}\Big[J_{o(m+1)}(\psi_m + \psi_{m+1}) - J_{om}(\psi_{m-1} + \psi_m) + 4\,(J_{d(m+1)} - J_{dm})\cos^3\alpha\,\psi_m\Big] \tag{43}$$

in other words

$$\underset{4}{R_{44}} = \frac{6\,E}{a^2}\cdot\Big[J_{o5}(\psi_4 + \psi_5) + J_{o4}(\psi_3 + \psi_4) + 4\,(J_{d5} - J_{d4})\cos^3\alpha\,\psi_4\Big]$$

$$\underset{4}{R_{34}} = \frac{6\,E}{a^2}\cdot\Big[J_{o4}(\psi_3 + \psi_4) + J_{o3}(\psi_2 + \psi_3) + 4\,(J_{d4} - J_{d3})\cos^3\alpha\,\psi_3\Big]$$

$$\underset{4}{R_{54}} = \frac{6\,E}{a^2}\cdot\Big[J_{o6}(\psi_5 + \psi_6) + J_{o5}(\psi_4 + \psi_5) + 4\,(J_{d6} - J_{d5})\cos^3\alpha\,\psi_5\Big].$$

Now

$$\left.\begin{aligned} R_{44} &= \underset{0}{R_{44}} + \underset{4}{R_{44}} \\ R_{34} &= \underset{0}{R_{34}} + \underset{4}{R_{34}} \\ R_{54} &= \underset{0}{R_{54}} + \underset{4}{R_{54}} \end{aligned}\right\}$$

After eliminating very small loading values we receive only R values whose indices do not differ by more than one.

If we load the system at the points m_o and m_n with the load couple One (Fig. 26), which we of course must add to the zero loading R_{om}, the deformations ζ produced by this loading couple One are given by the equation:

$$R_m = o = R_{m\,(m-1)}\ \zeta_{m-1} + R_{m\,m}\ \zeta_m + R_{m\,(m+1)}\ \zeta_{m+1} \qquad (44)$$

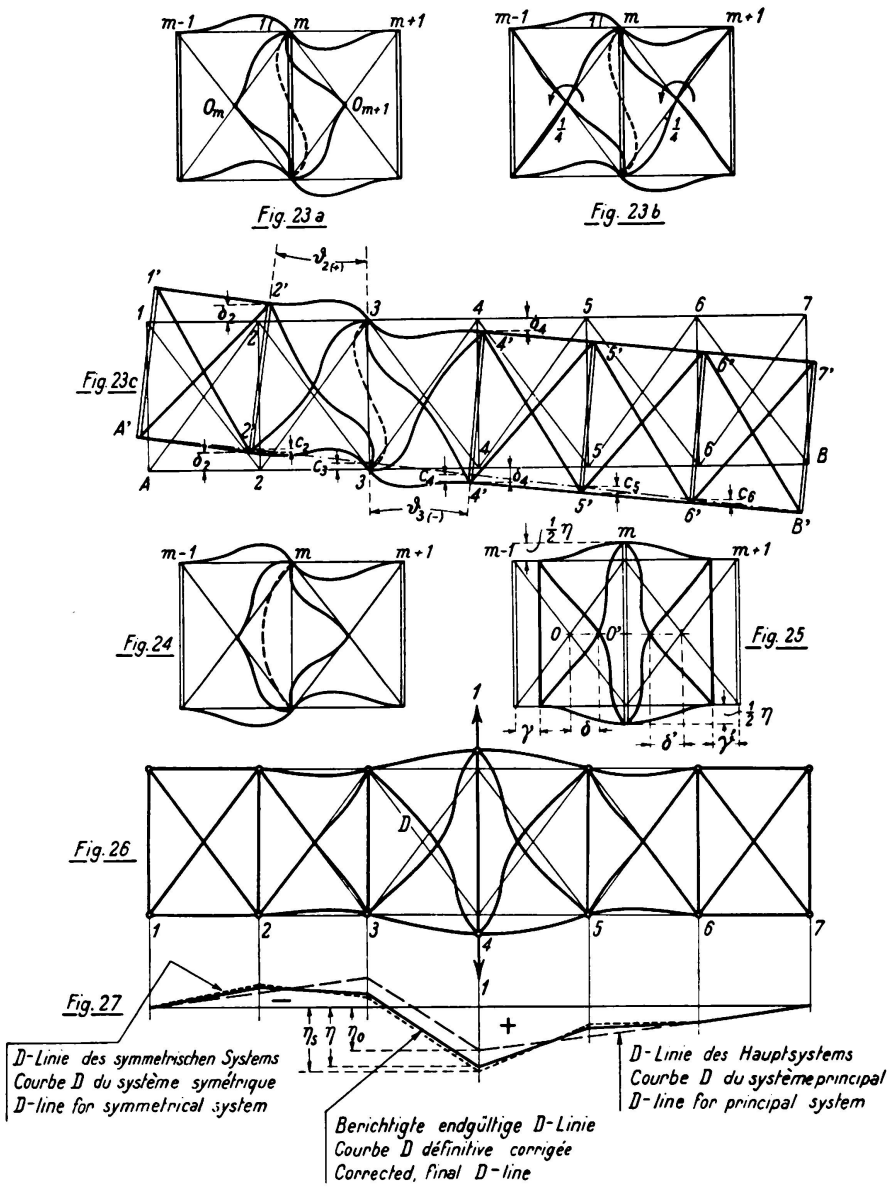

Fig. 23—27.

In our case, for loading situated at the points 4_o and 4_u we receive the complete table

	ζ_1	ζ_2	ζ_3	ζ_4	ζ_5	ζ_6	ζ_7	
1	R_{11}	R_{12}						
2	R_{21}	R_{22}	R_{23}					
3		R_{32}	R_{33}	R_{34}				
4			R_{43}	R_{44}	R_{45}			1
5				R_{54}	R_{55}	R_{56}		
6					R_{65}	R_{66}	R_{67}	
7						R_{76}	R_{77}	

(44a)

Equational system 44 is again a system of the *Clapeyron* type. If we write the independent value $+1$ successively in the horizontal rows from 1 to 7, it gives us the ζ values created by loading the pairs of points with pairs of loads of the unit One.

The seven deflection lines of the loaded (bottom) boom now obtained are the influence lines for the seven values $\zeta_1 \ldots \zeta_7$. But as each of these values of ζ corresponds (Fig. 26) to very definite values of force magnitude for the axial stresses of the members and of the end moments of the members in the adjoining panels (here we can confine ourselves to the two panels lying left and right of the respective ζ), we obtain for all force quantities in a panel m additonal influence lines whose ordinates η are given by the equation:

$$\eta_m = \mu_{m-1}\,\zeta_{m-1} + \mu_m\,\zeta_m. \tag{45}$$

These additional influence lines have to be added to the influence lines found with Fig. 11 and already corrected with the deflection lines from Fig. 23 e; we then receive the final influence lines for all force quantities.

There only remains to add a comment on the influence lines found on the basis of the deformations in Figs. 19—21. As we noticed, besides the anti-symmetrical loading of the upper and lower boom panel points, there was also a symmetrical loading which did not cause displacement of the loaded points at first, i. e. as long as the hinged supplementary posts were present. However, the angles of torsion ψ produced by this symmetrical loading (Eq. 36) transmit loadings to these hinged supplementary posts (Eq. 43) which, introduced into Equational System 44 in the form of independent elements, give values for $\zeta_1 \ldots \zeta_7$. The deflection lines of the loaded boom as determined hereby has still to be added to the relative influence lines. On the other hand, an anti-symmetrical moment loading which produces the angle of torsion φ, causes bending of the whole girder as shown in Fig. 25 e but not loading of the posts, i. e. not a force tending to thrust them apart.

5) *Subsequent correction of the influence lines for unsymmetrical girders.*

We have established the influence lines for the main system under consideration of the various cross sections or moments of inertia of the upper and lower booms. In the further development of these influence lines, however, we

did not take account of unsymmetry, taking in each case the chord lying remote from the decking as our basis and on this assumption obtaining the deflection line of the decking boom as the influence line.

Now if the dash line in Fig. 27 be the influence line of the main system, obtained correctly under consideration of unsymmetry, and the dotted line be the final influence line obtained without considering unsymmetry, then we can ascertain the difference between the moments of inertia J_t of the real girder, and those (J_s) of the girder assumed to be symmetrical. It can now be conceived that the girder with the moment of inertia $J_t - J_s$ which has the tendency to follow the deformation line of the main system can be forcibly brought into the position of the dotted line. It will then have the tendency to bend the deformation line of the boom back to the original position of the deflection line of the main system.

If the indices of the influence line of the main system are η_o, those of the symmetrical system η_s and those of the final system η, the correct indices will be approximated by

$$\eta = \eta_o + (\eta_s - \eta_o)\frac{J_s}{J_t}. \tag{46}$$

As the difference between J_s and J_t will never be anything but small, it follows that inaccuracy caused by assuming symmetry will always be slight, so that its correction by means of the approximating process given here is quite permissible.

6) *Concise summary of the method.*

1) Determination of the influence lines of the main system for the forces shown in Fig. 11 by applying the deformation "One" corresponding to the respective force.
2) Determination of the moment loading caused by this deformation at the panel points; grouping of these loadings into anti-symmetrical and symmetrical moment loading of the top and bottom boom panel points (Eq. 26 and 30—32).
3) Exposition of the individual conditions (7 of each): $\varphi_m = 1$, $\psi = 1$ (Figs. 23—24).
4) Evaluation of the coefficients M_{mm} from this individual conditions (Eq. 23—25 and 33—35).
5) Arrangement of the *Clapeyron* equational systems 29 a and 36 from the independent loading elements obtained in 2) and from the coefficients of the dependent elements obtained in 4).
6) Solution of these equational systems, from which the angles of distortion φ_m and ψ_m of the panel points are obtained. Thus, too, are found (Fig. 23 c) the deformation lines of the loaded boom pertaining to each of the known angles φ_m; these lines are added to the influence lines obtained in Fig. 11, while the symmetrical torsion angles ψ_m do not cause displacement of the panel points of the loaded boom.
7) Exposition of the individual conditions "$\eta_m = 1$" (Fig. 25); determination of the moment loadings thereby produced in the panel points — in this

case they are only symmetrical; application of these moment loadings, in the form of independent elements; solutions of these equations, giving all the panel point angles of torsions ψ_m for each condition $\eta_m = 1$ and thus the conditions $\zeta_m = 1$.

8) Determination of the loadings set up at the supplementary posts for the individual conditions $\zeta_m = 1$.

9) Application of pairs of point loads at the individual panel points m in the form of basic loadings of the system.

10) Arrangement of Equational System 44 for the individual pairs of point loads, employing the independent elements and the coefficients of dependent elements as given in 8) and 9).
individual pairs of point loads, after removal of the supplementary posts, and with them the influence lines for $\zeta_1 \ldots . \zeta_7$.

11) The solution of the 7 Eq. 44 gives the deformations pertaining to the

12) All the values of forces acting in each separate panel are represented as linear functions of the two values of ζ pertaining to that particular panel, and their additional influence lines are developed accordingly from the influence lines of these two ζ values.

13) For the influence lines of the end moments of the members, whose deformations also reveal symmetrical loadings at the panel points, Eq. 44 is employed to calculate the respective values of ζ, and the portions ζ pertaining to the bending of the loaded boom are added to the influence lines already found.

14) Correction of the influence lines found as in Eq. 46 (Fig. 27) for unsymmetrical girders.

Thus we have solved the difficult problem of treating the rhombic lattice girder composed of rigidly connected members, applying only three simple equational systems of the *Clapeyron* form; it should be noted that in every case only the independent elements and never the coefficients of the dependent elements alter.

Summary.

The calculation of lattice girders with rhombic arrangement of web members under the assumption of frictionless panel points leads to influence lines for the members and deflection lines which have a very marked zig-zag appearance. On taking the stiffness of chords into account, this zig-zag appearance vanishes and the influence lines and deflection lines show a more steady flow; they are very much different from those worked out under the assumption of frictionsless hinges.

The report shows further in what way it is possible to consider the stiffness of struts and their connections, without having to solve difficult equations with many unknowns.

In the first instance the influence lines of the main system are determined by means of the deformation method. The main system is formed by introducing a rigid post for each rhombic bay, in rigid connection with chords and struts, and assumed to be stiff against bending.

The solving of the problem is further carried out by using three equation systems in the form of *Clapeyron* formulae, giving as many unknowns as there are auxiliary posts introduced into the girder system.

From the first equation system are received the part-deformation angles φ for the panel points of the upper and lower boom; these are in anti-symmetrical position to the horizontal girder axis, hereby assuming the stiff connections of the auxiliary posts to be replaced by hinges.

The second equation system supplies the part-deformation angles ψ, all symmetrical to the horizontal girder axis, for panel points of the upper and lower boom. The angles φ and ψ together supply with the aid of the load-re-arranging method, the real deformation angles of the panel points for hinged connections of the rigid auxiliary posts.

The third equation system gives the vertical displacements ξ of the panel points of the upper and lower chord, which develop after removal of the rigid auxiliary posts.

By means of the values φ, ψ and ζ received from the three systems of equations the influence lines of the actual girder system are developed by using as basis the influence lines of the fundamental main system.

Leere Seite
Blank page
Page vide